THIS DRAWING AND SPECIFICATIONS, HEREIN, ARE THE PROPERTY OF INVENTEC CORPORATION AND SHALL NOT BE REPODUCED, COPIED, OR USED IN WHOLE OR IN PART AS THE BASIS FOR THE MANUFACTURE OR SALE OF ITEMS WITHOUT WRITTEN PERMISSION, INVENTEC CORPORATION 2009 ALL RIGHT RESERVED

HSF Property : HF

ZIDANE 2.0

www.aitech1.ru

MV Build

2011/03/03

DATE	CHANGE NO.	REV
2011-02-09		B
2010-10-06	2010-ECO-020288	A

	EE	DATE	POWER	DATE
DRAWER	Chang,Tommy	2010-06-14	Ho, Wen-Pin	2010-06-14
DESIGN	Chang,Tommy	2010-06-14	Ho, Wen-Pin	2010-06-14
CHECK	Chih,Johnson	2010-06-14	Ho, Wen-Pin	2010-06-14
RESPONSIBLE	Chih,Johnson	2010-06-14	Ho, Wen-Pin	2010-06-14

SIZE = 3 VER :

FILE NAME : XXXX-XXXXXX-XX

P/N XXXXXXXXXXXX

INVENTEC

TITLE ZIDANE2.0

SIZE	CODE	DOC. NUMBER	REV
A3	CS	1310A24024-0-MTR	B

SHEET 1 OF 58

Index

PAGE
01. PROJECT NAME
02. INDEX
03. Block Diagram
04. POWER Procedure
05. DC & CHARGE Circuit
06. Battery CONN
07. +V3A & +V5A
08. +V1.5 & +V0.75
09. +V1.8S & +V1.05S
10. +VCC_CORE
11. +VGFX_CORE
12. VTT & VPCIE & VDDC_GPU
13. +V5S & +V3S
14. CLK GEN
15. CPU-1
16. CPU-2
17. CPU-3
18. CPU-4
19. CPU-5
20. CPU-6
21. Thermal, Fan & XDP
22. DDR3-1
23. DDR3-2
24. PCH-1
25. PCH-2
26. PCH-3
27. PCH-4
28. PCH-5
29. PCH-6
30. PCH-7

PAGE
31. PCH-8
32. PCH-9
33. KBC
34. Keyboard & TouchPad
35. CRT CONN
36. LCM CONN
37. HDMI CONN
38. SATA HDD & ODD
39. LAN
40. RJ-45
41. Card Reader
42. Audio Codec
43. HP JACK & MIC JACK
44. ESATA, SCREW
45. WLAN & BlueTooth
46. USB, PowerButton(DB)
47. WWAN(Option)
48. FP & HD LOCK(Option)
49 PARK-S3 PCIE INTERFACE
50 PARK-S3 Display and GIPO INTERFACE
51 PARK-S3 CLK and DDC INTERFACE
52 PARK-S3 POWER INTERFACE
53 PARK-S3 DP Power and LVDS INTERFACE
54 PARK-S3 Memory INTERFACE
55 VRAM-1(DDR3)
56 VRAM-2(DDR3)

www.altech1.ru

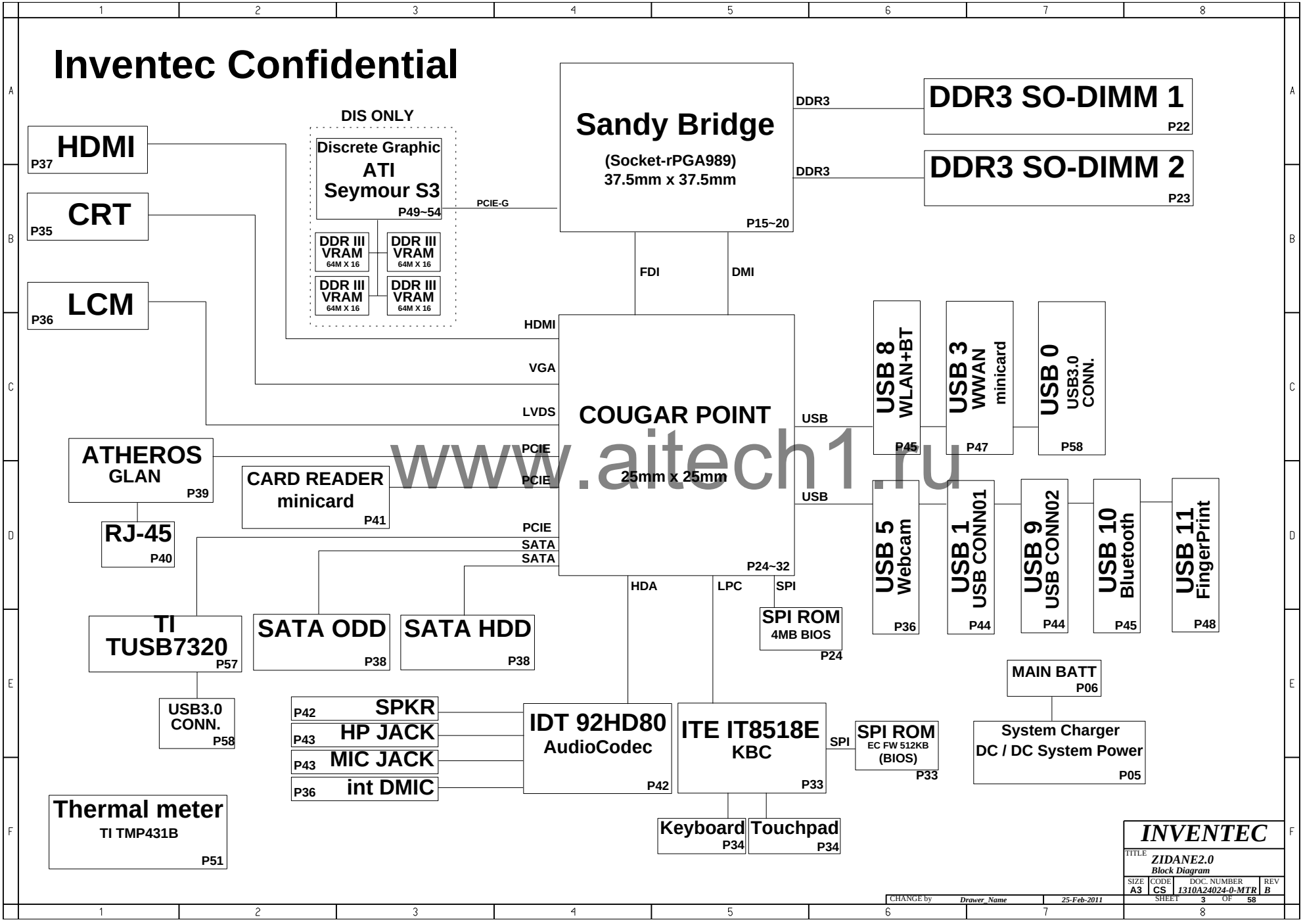

www.aitech1.ru

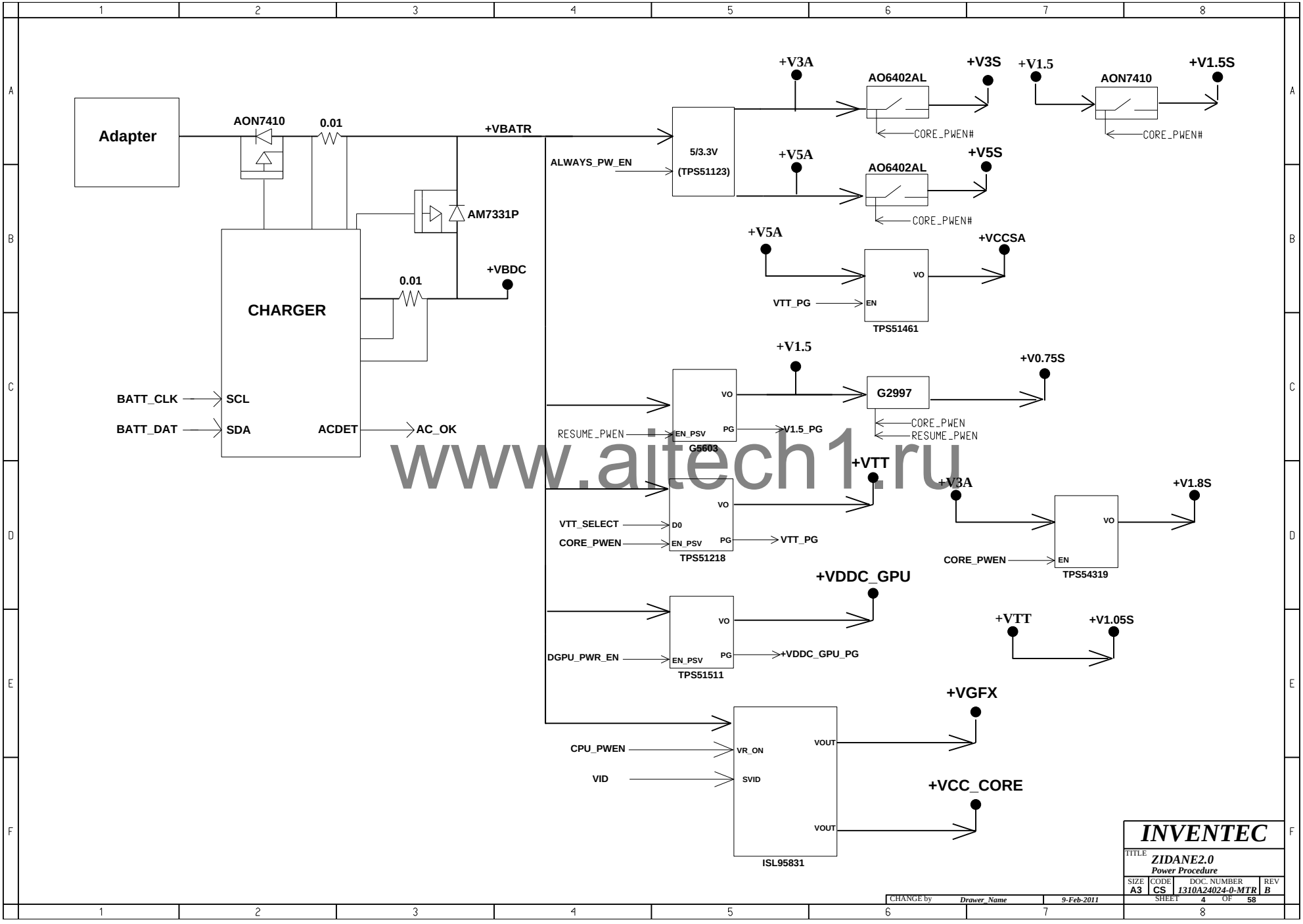

www.aitech1.ru

INVENTEC			
TITLE ZIDANE2.0 Power Procedure			
SIZE A3	CODE CS	DOC. NUMBER 1310A24024-0-MTR	REV B
CHANGE by Drawer_Name	9-Feb-2011	SHEET 4 OF 58	

AC-IN

p/n:6012B0348401-001

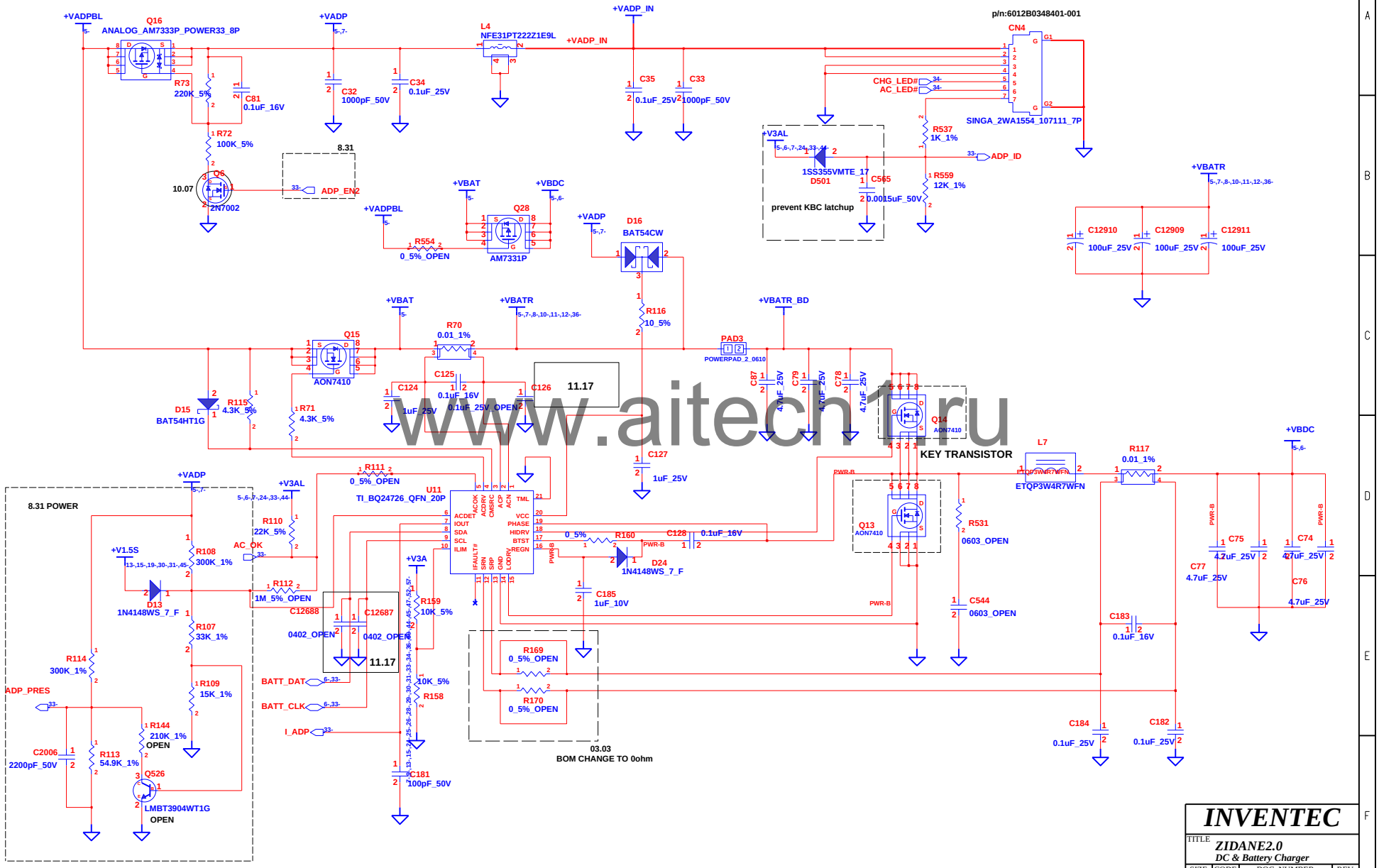

www.aitech.ru

CHANGE by	Drawer_Name	9-Feb-2011	

INVENTEC

TITLE: *ZIDANE2.0*
DC & Battery Charger

SIZE	CODE	DOC. NUMBER	REV
A3	CS	1310A24024-0-MTR	B

SHEET 5 OF 58

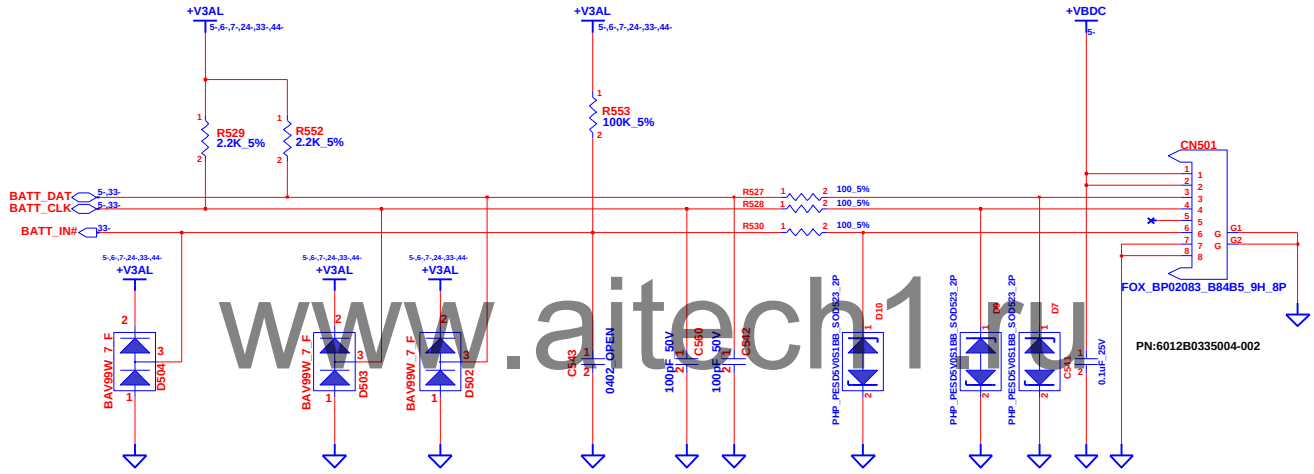

www.aitech1.ru

CHANGE by	Drawer_Name	9-Feb-2011	

INVENTEC

TITLE *ZIDANE2.0*
Battery CONN

SIZE	CODE	DOC. NUMBER	REV
A3	CS	1310A24024-0-MTR	B

SHEET 6 OF 58

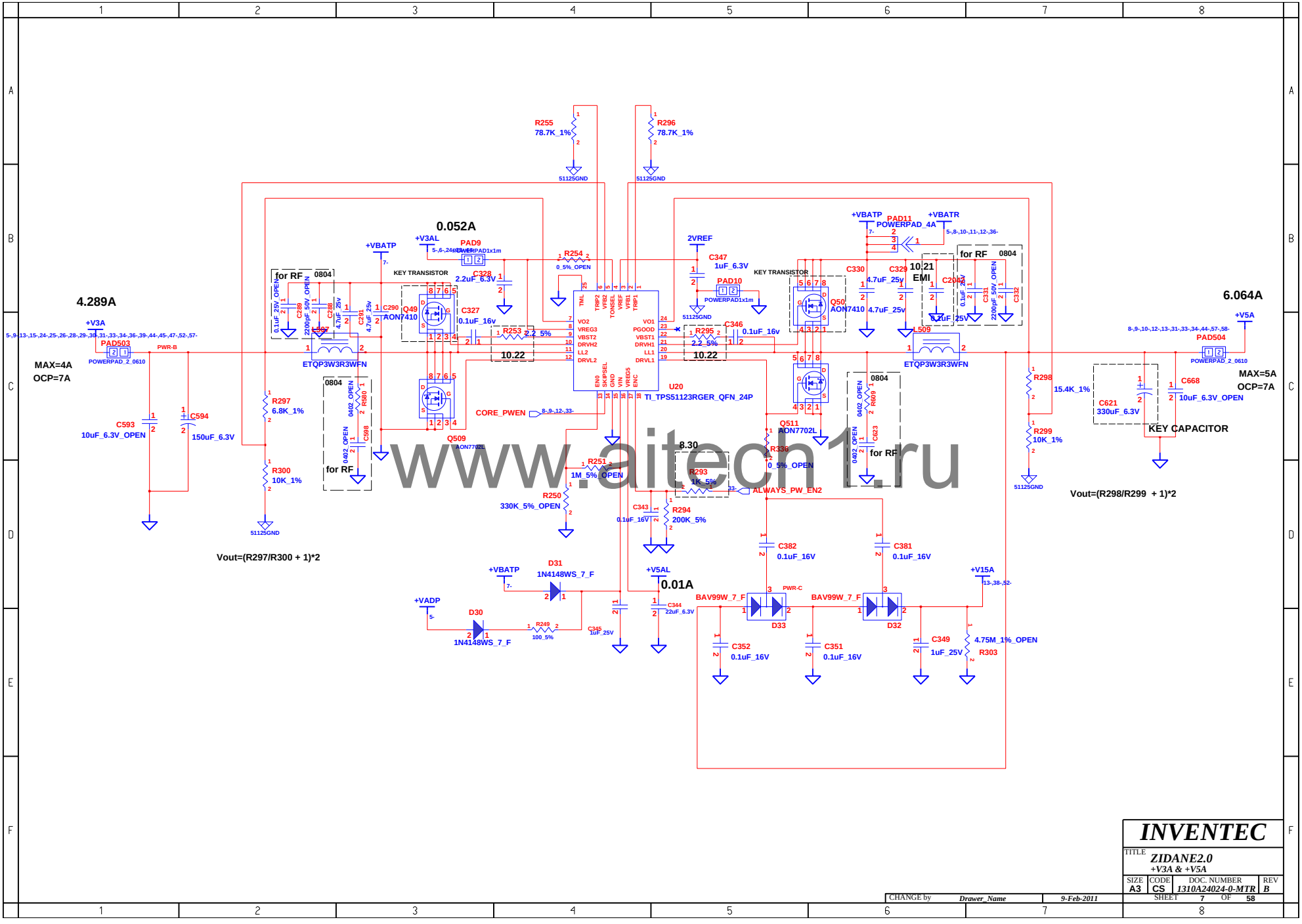
4.289A
MAX=4A
OCP=7A
+V3A
PAD503
POWERPAD_2_0610
PWR-B
C593
10uF_6.3V_OPEN
C594
150uF_6.3V
R297
6.8K_1%
R300
10K_1%
Vout=(R297/R300 + 1)*2
0.052A
+V3AL
PAD9
POWERPAD1x1m
+VBATP
KEY TRANSISTOR
Q49
AON7410
C328
2.2uF_6.3V
C327
0.1uF_16v
R253
2.2_5%
10.22
ETQP3W3R3WFN
Q509
AON7702L
CORE_PWEN
R255
78.7K_1%
R296
78.7K_1%
51125GND
R254
0_5%_OPEN
R251
1M_5%_OPEN
R250
330K_5%_OPEN
U20
TI_TPS51123RGER_QFN_24P
2VREF
C347
1uF_6.3V
PAD10
POWERPAD1x1m
C346
0.1uF_16v
R295
2.2_5%
10.22
8.30
R293
1K_5%
ALWAYS_PW_EN2
C343
0.1uF_16V
R294
200K_5%
+VADP
D30
1N4148WS_7_F
R249
100_5%
C345
1uF_25V
D31
1N4148WS_7_F
+V5AL
0.01A
C344
22uF_6.3V
+VBATP
PAD11
POWERPAD_4A
+VBATR
Q50
AON7410
C330
4.7uF_25v
C329
4.7uF_25v
10/21
EMI
C331
2200pF_50V_OPEN
C332
Q511
AON7702L
R336
0_5%_OPEN
C382
0.1uF_16V
C381
0.1uF_16V
BAV99W_7_F
D33
D32
PWR-C
C352
0.1uF_16V
C351
0.1uF_16V
C349
1uF_25V
+V15A
4.75M_1%_OPEN
R303
6.064A
+V5A
PAD504
POWERPAD_2_0610
MAX=5A
OCP=7A
R298
15.4K_1%
R299
10K_1%
C621
330uF_6.3V
C668
10uF_6.3V_OPEN
KEY CAPACITOR
Vout=(R298/R299 + 1)*2
for RF
0804
0402_OPEN
R580
C598
R609
C623
www.aitech1.ru
INVENTEC
TITLE
ZIDANE2.0
+V3A & +V5A
SIZE A3
CODE CS
DOC. NUMBER 1310A24024-0-MTR
REV B
SHEET 7 OF 58
CHANGE by Drawer_Name
9-Feb-2011

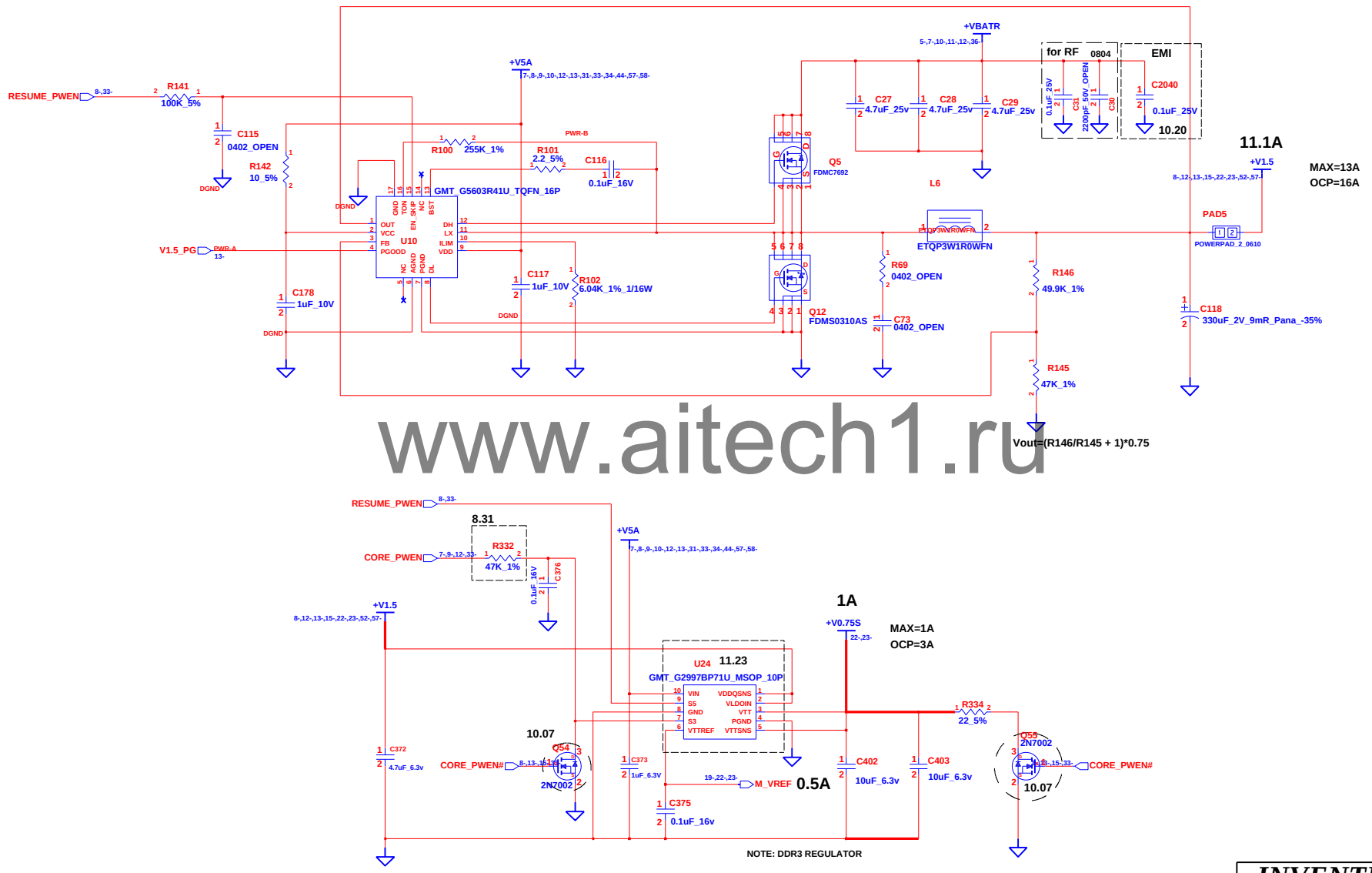

www.aitech1.ru

INVENTEC			
TITLE ZIDANE2.0 +V1.5 & +V0.75			
SIZE A3	CODE CS	DOC. NUMBER 1310A24024-0-MTR	REV B
CHANGE by Drawer_Name	9-Feb-2011	SHEET 8 OF 58	

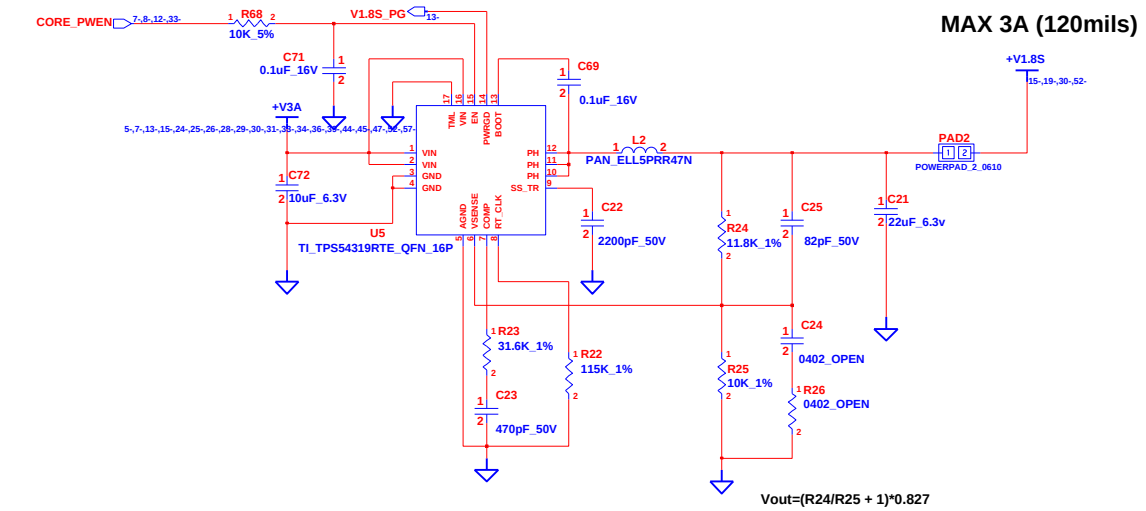

www.aitech1.ru

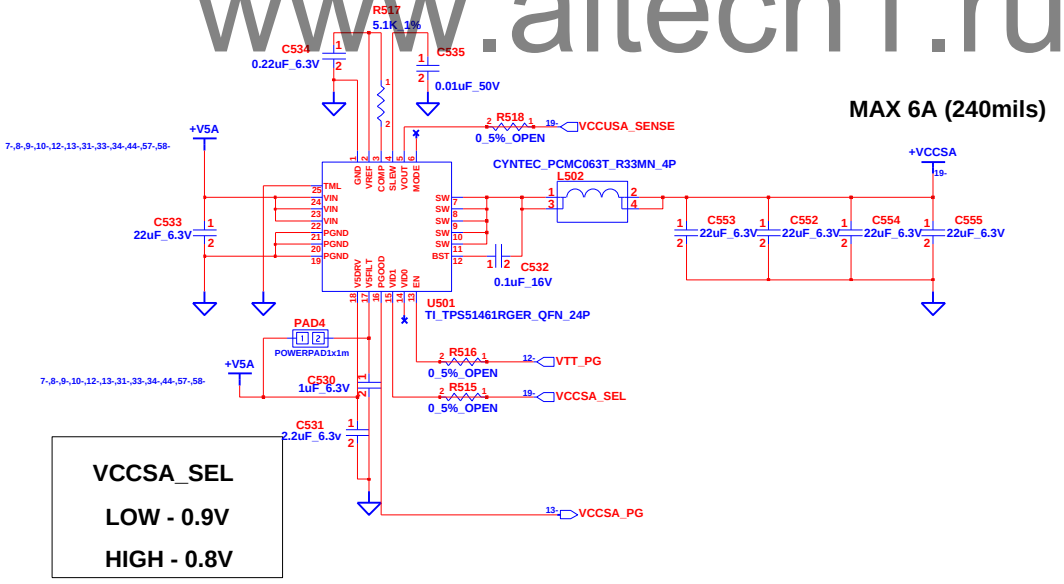

CHANGE by	Drawer_Name	9-Feb-2011	

INVENTEC

TITLE: *ZIDANE2.0*
+V1.8S & +VCCSA

SIZE	CODE	DOC. NUMBER	REV
A3	CS	1310A24024-0-MTR	B

SHEET 9 OF 58

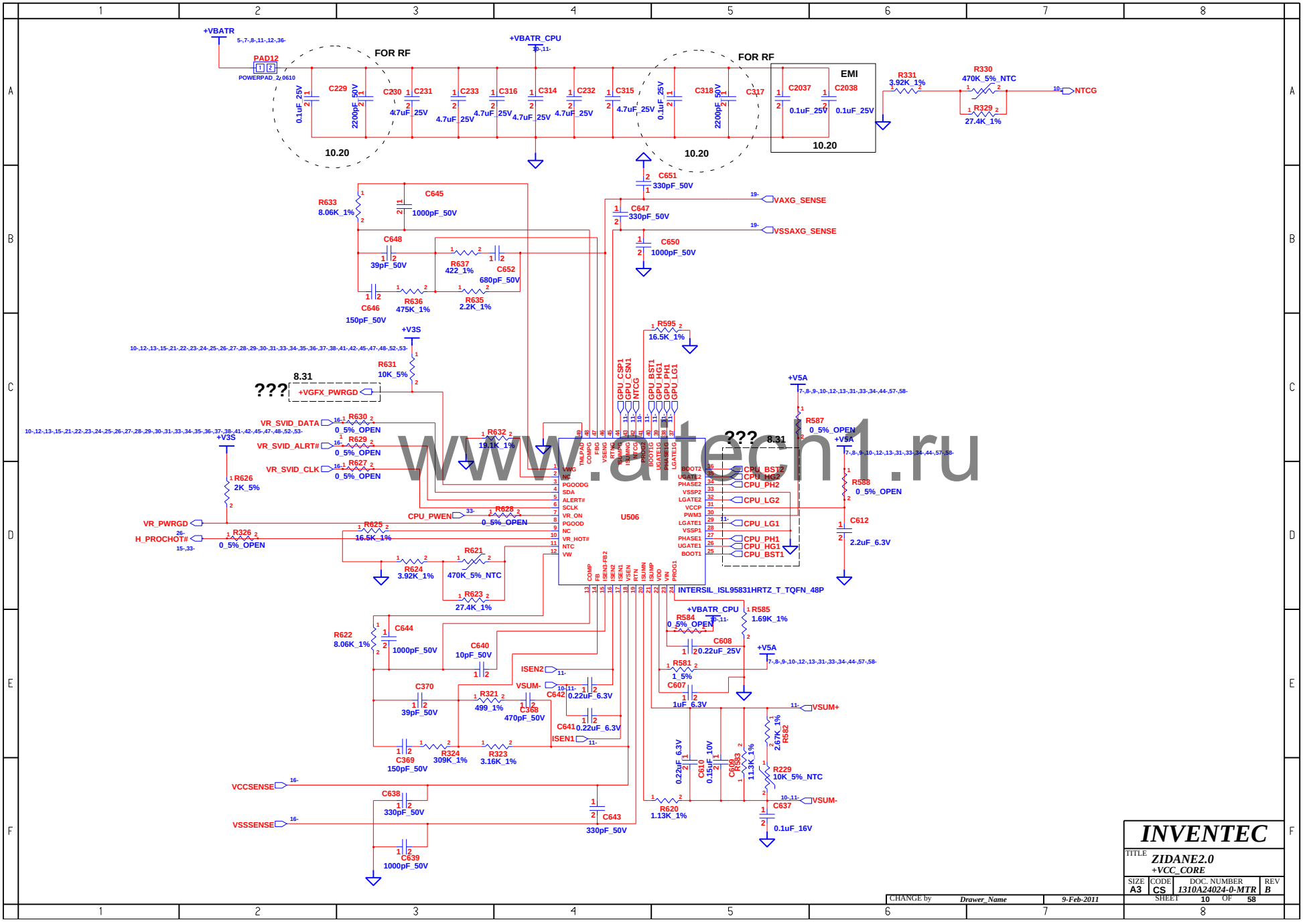

www.altech1.ru

VCC_CORE (SV 35W-->MAX 53A)
(Quad 45W-->MAX 94A)

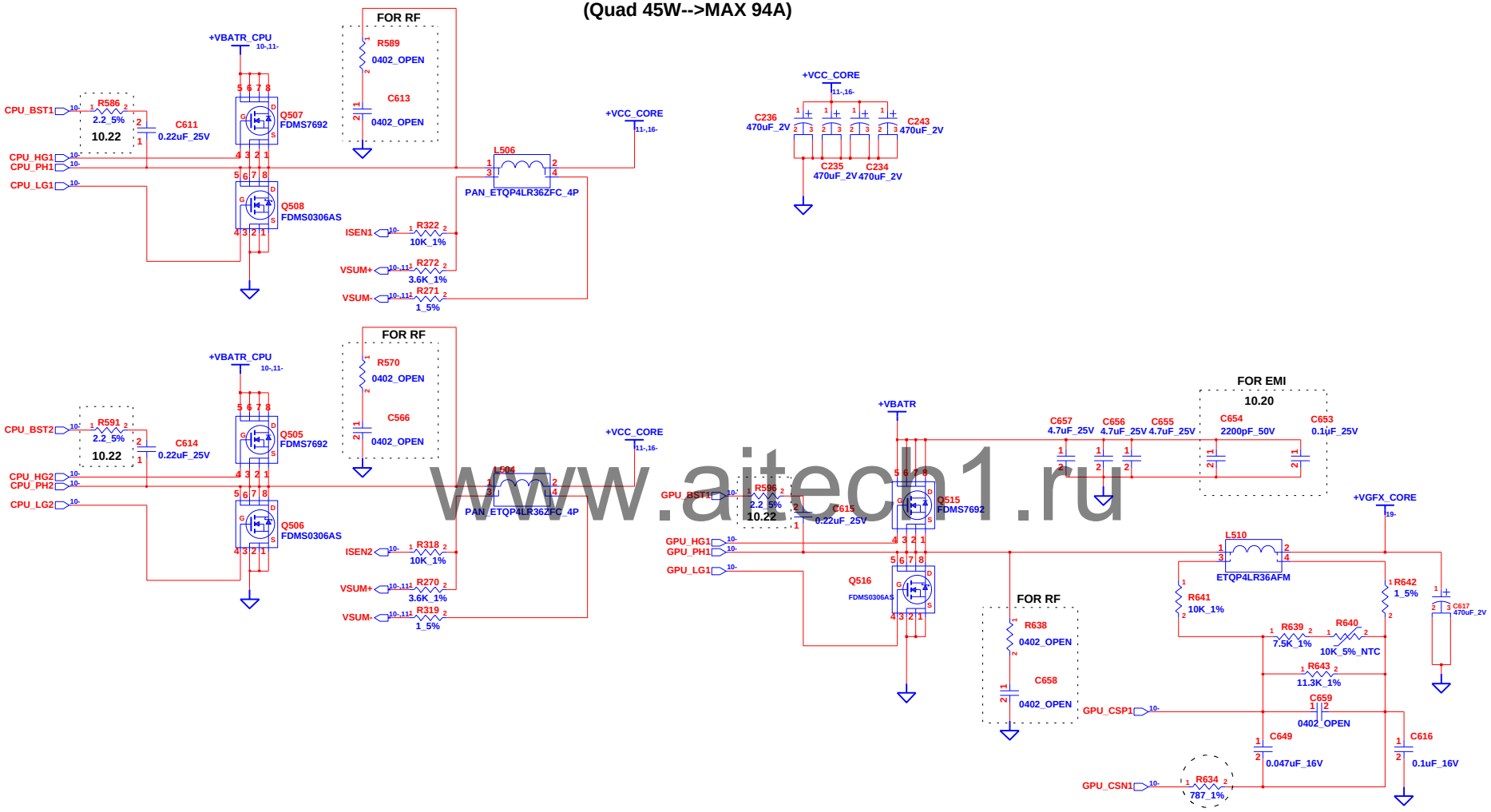

www.aitech1.ru

INVENTEC			
TITLE: ZIDANE2.0 +VGFX_CORE			
SIZE: A3	CODE: CS	DOC. NUMBER: 1310A24024-0-MTR	REV: B
CHANGE by: Drawer_Name	9-Feb-2011	SHEET 11 OF 58	

DIS ONLY UMA N/A

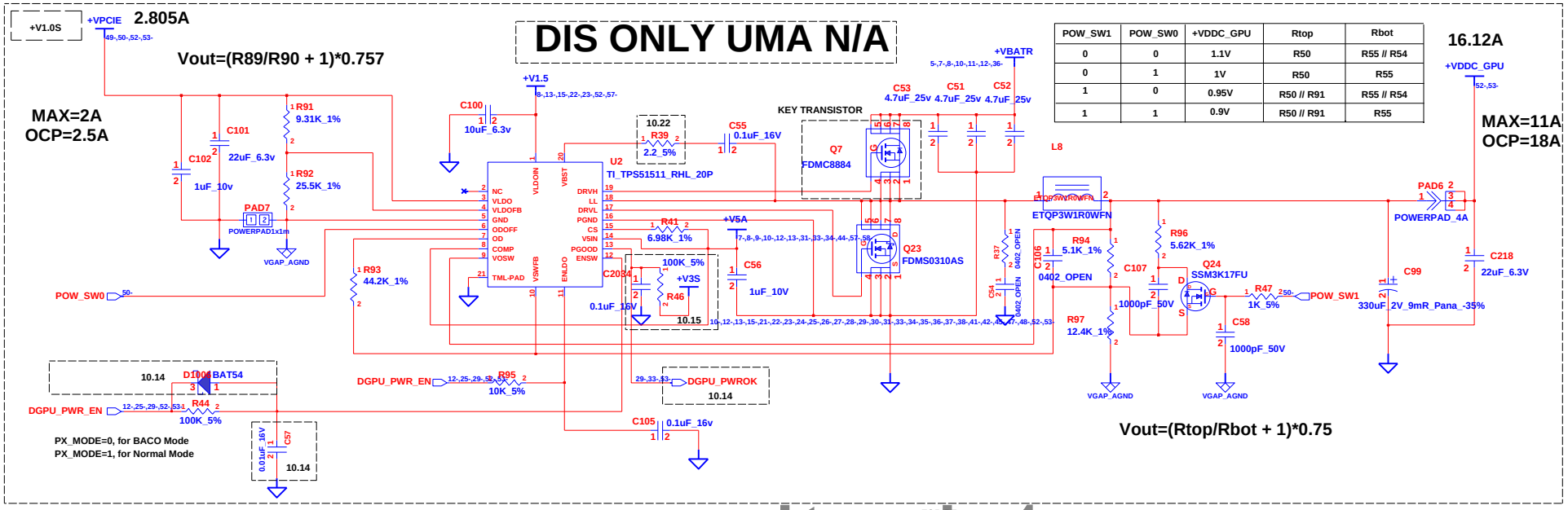

POW_SW1	POW_SW0	+VDDC_GPU	Rtop	Rbot
0	0	1.1V	R50	R55 // R54
0	1	1V	R50	R55
1	0	0.95V	R50 // R91	R55 // R54
1	1	0.9V	R50 // R91	R55

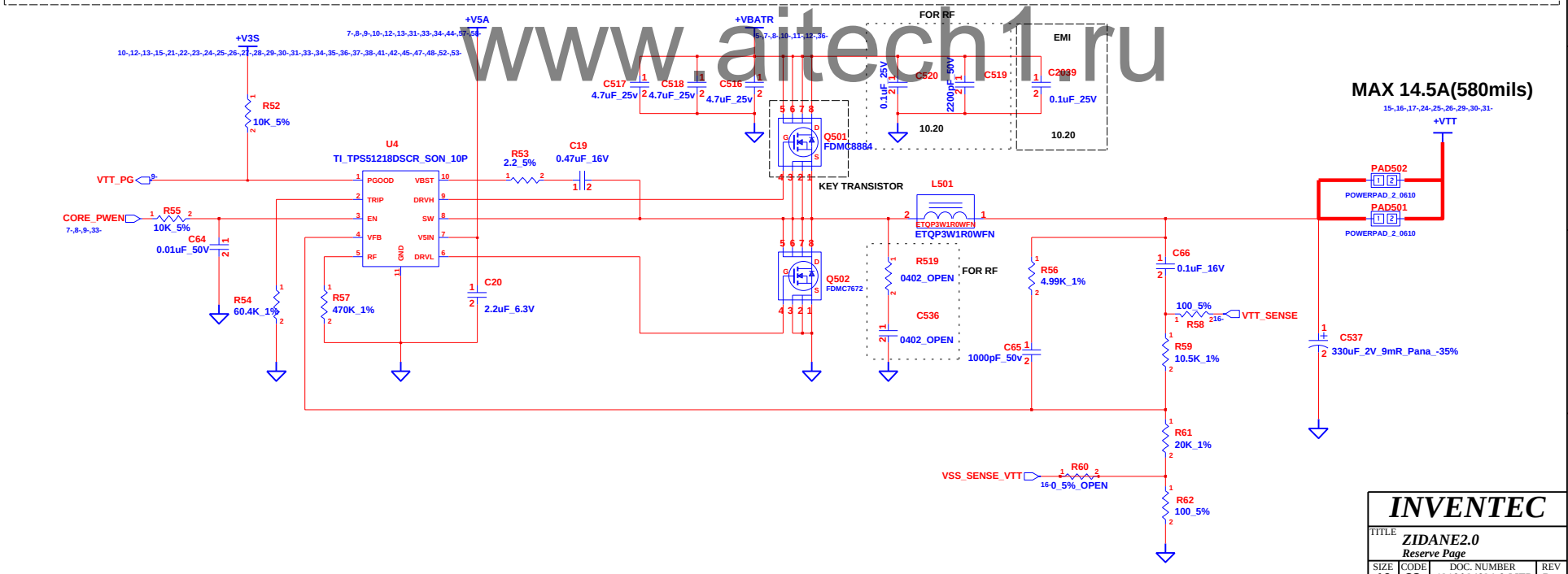

www.aitech1.ru

INVENTEC

TITLE ZIDANE2.0
Reserve Page

SIZE	CODE	DOC. NUMBER	REV
A3	CS	1310A24024-0-MTR	B

SHEET 12 OF 58

CHANGE by Drawer_Name 9-Feb-2011

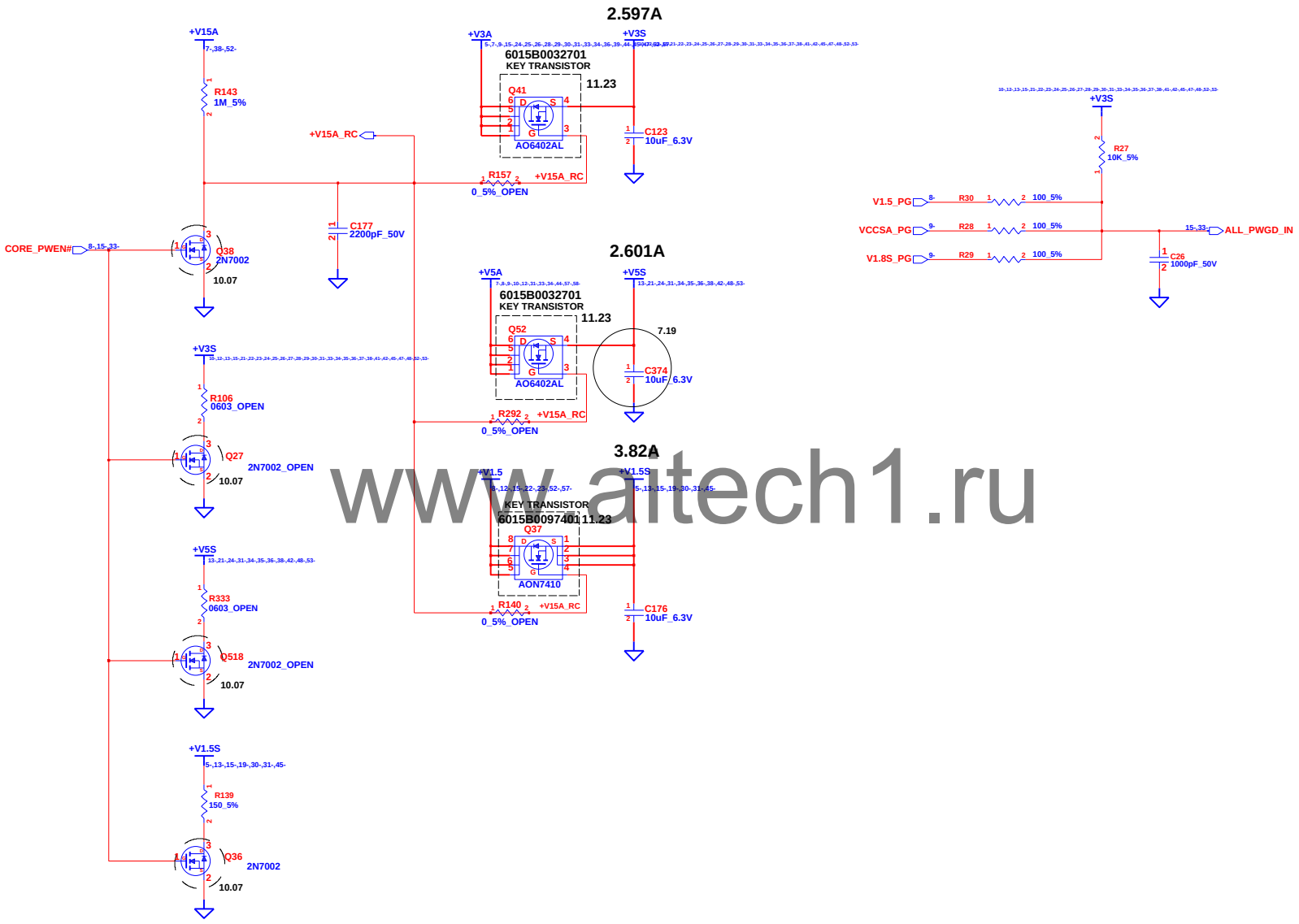

www.altech1.ru

CHANGE by	Drawer_Name	9-Feb-2011	

INVENTEC

TITLE: *ZIDANE2.0*
+V5S & +V3S

SIZE	CODE	DOC. NUMBER	REV
A3	CS	1310A24024-0-MTR	B

SHEET 13 OF 58

BLANK

www.altech1.ru

INVENTEC					
TITLE ZIDANE2.0 CLK GEN					
SIZE A3	CODE CS	DOC. NUMBER 1310A24024-0-MTR		REV B	
CHANGE by Drawer_Name	9-Feb-2011	SHEET 14 OF 58			

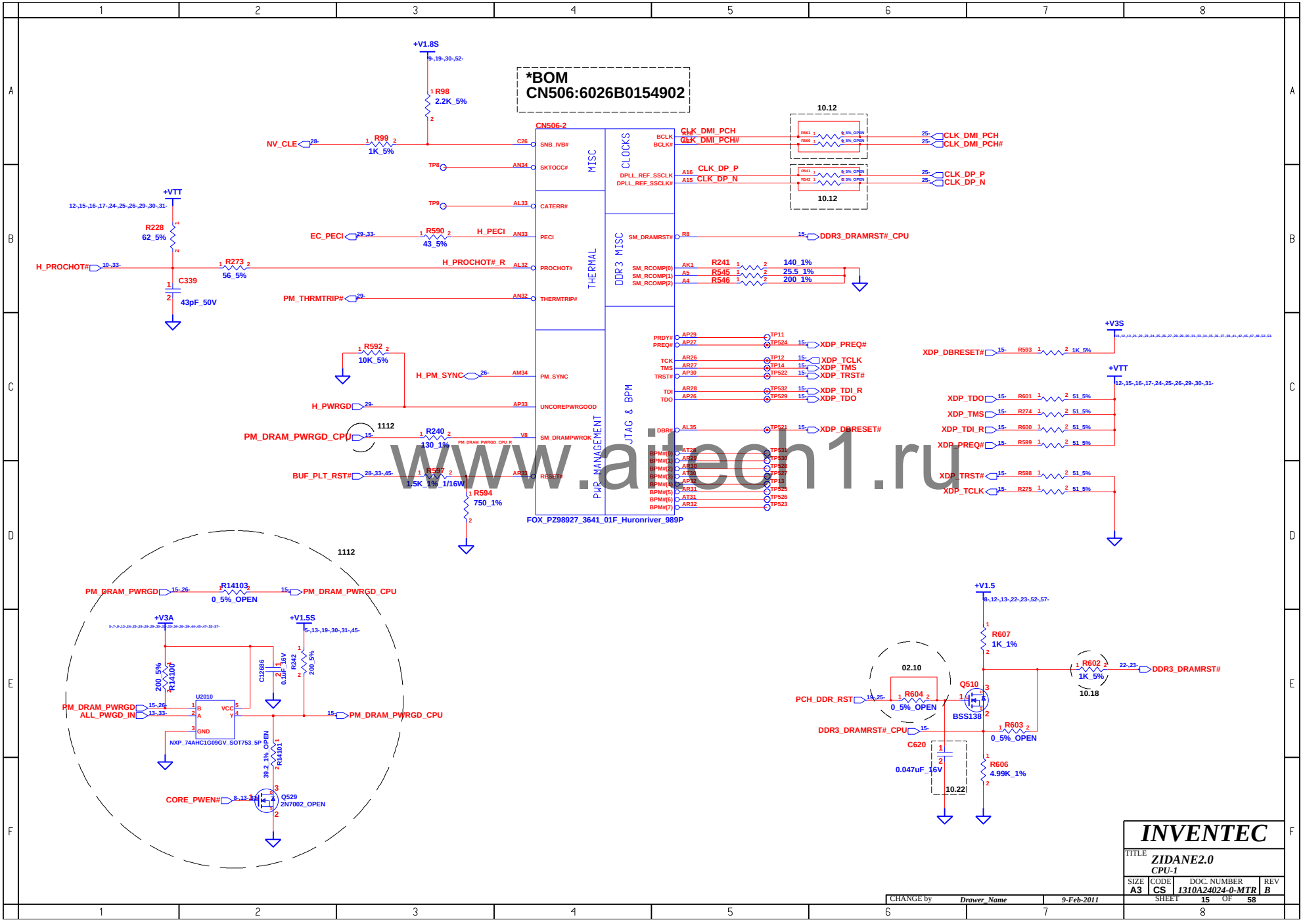

www.aitech1.ru

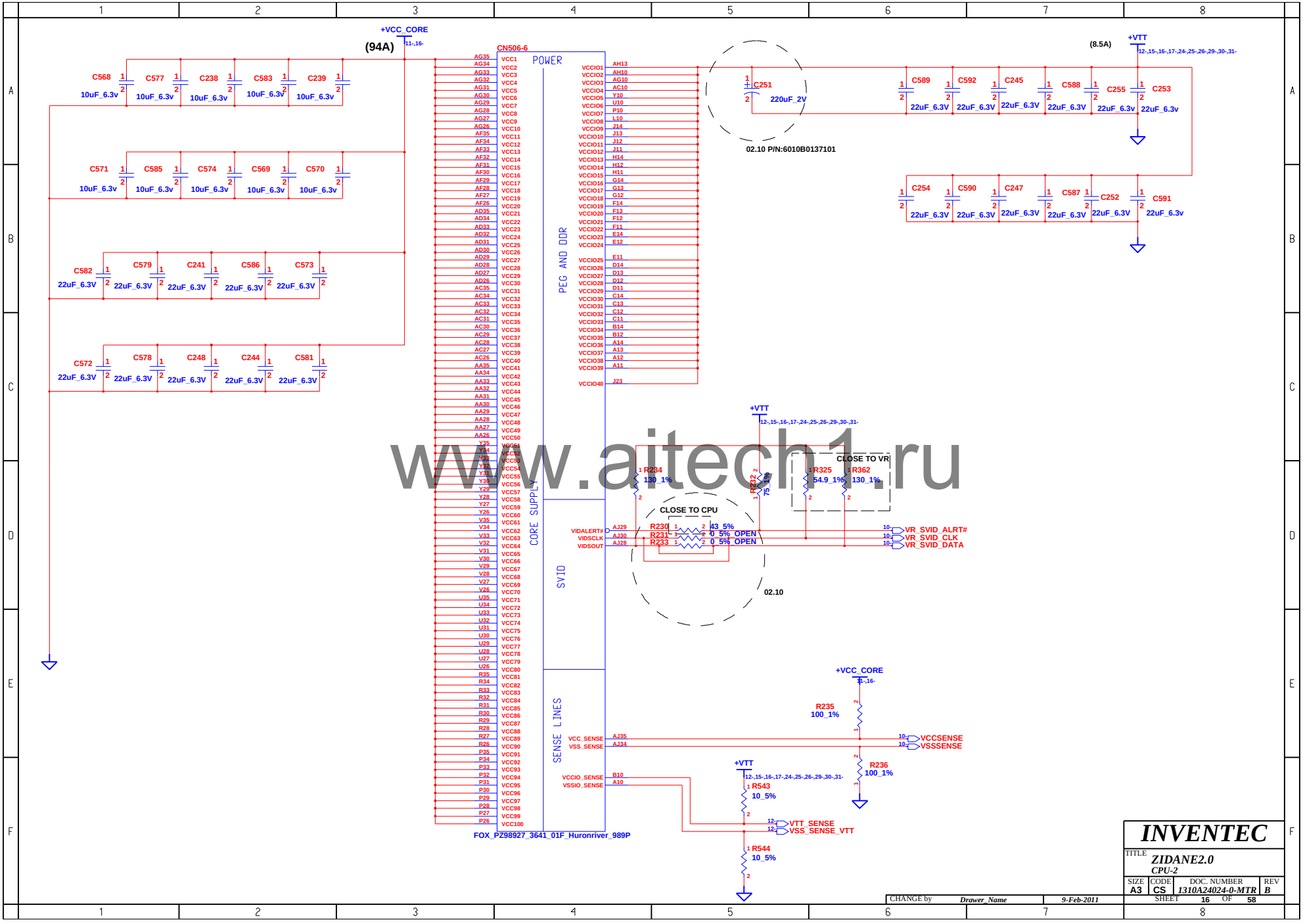

www.aitech1.ru

INVENTEC			
TITLE ZIDANE2.0 CPU-2			
SIZE A3	CODE CS	DOC. NUMBER 1310A24024-0-MTR	REV B
CHANGE by Drawer_Name	9-Feb-2011	SHEET 16 OF 58	

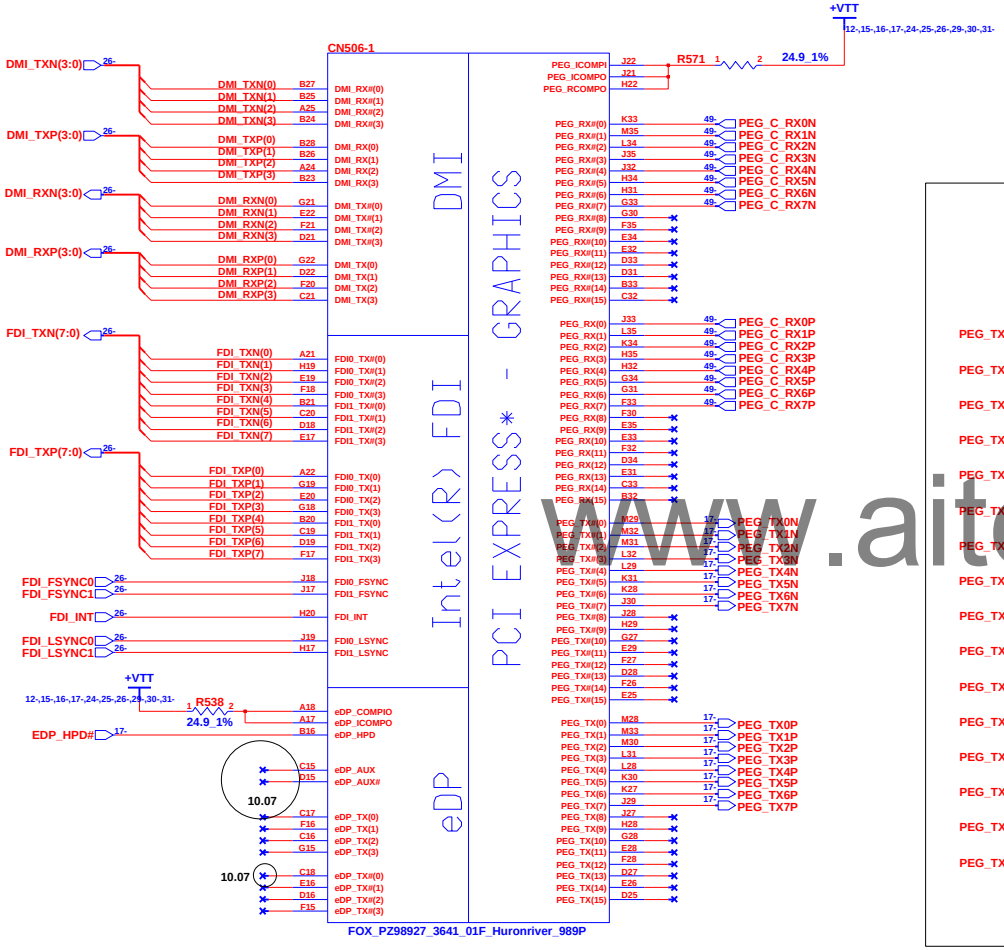

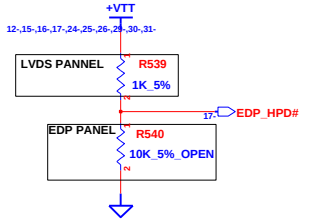

DIS ONLY UMA N/A

CLOSED TO CPU

www.aitech1.ru

CHANGE by	Drawer_Name	9-Feb-2011	

INVENTEC

TITLE *ZIDANE2.0*
CPU-3

SIZE	CODE	DOC. NUMBER	REV
A3	CS	1310A24024-0-MTR	B

SHEET 17 OF 58

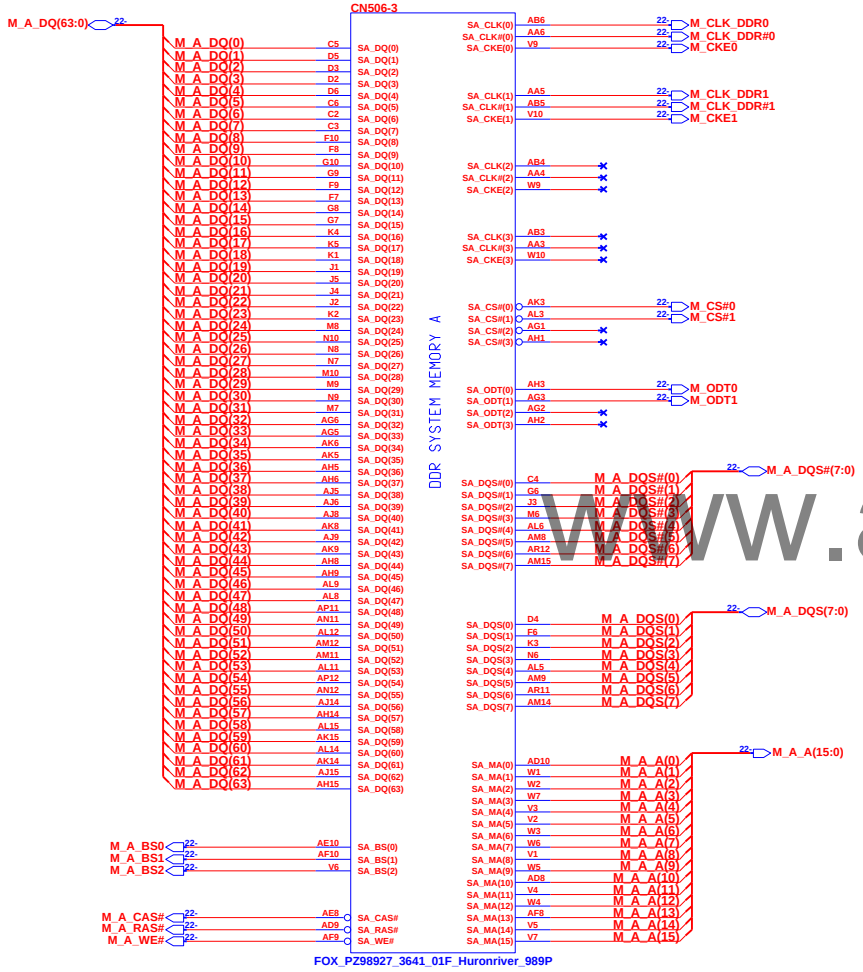

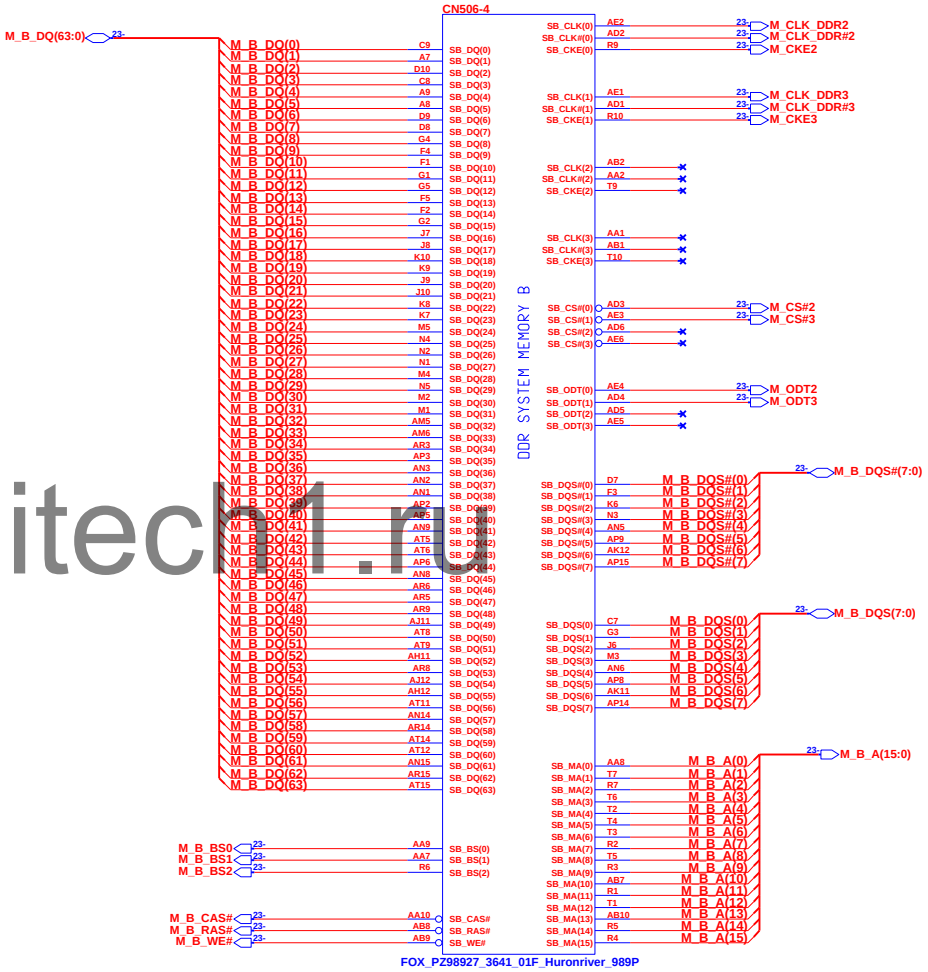

www.aitech.ru

CHANGE by	Drawer_Name	9-Feb-2011	

INVENTEC

TITLE: ZIDANE2.0
CPU-4

SIZE	CODE	DOC. NUMBER	REV
A3	CS	1310A24024-0-MTR	B

SHEET 18 OF 58

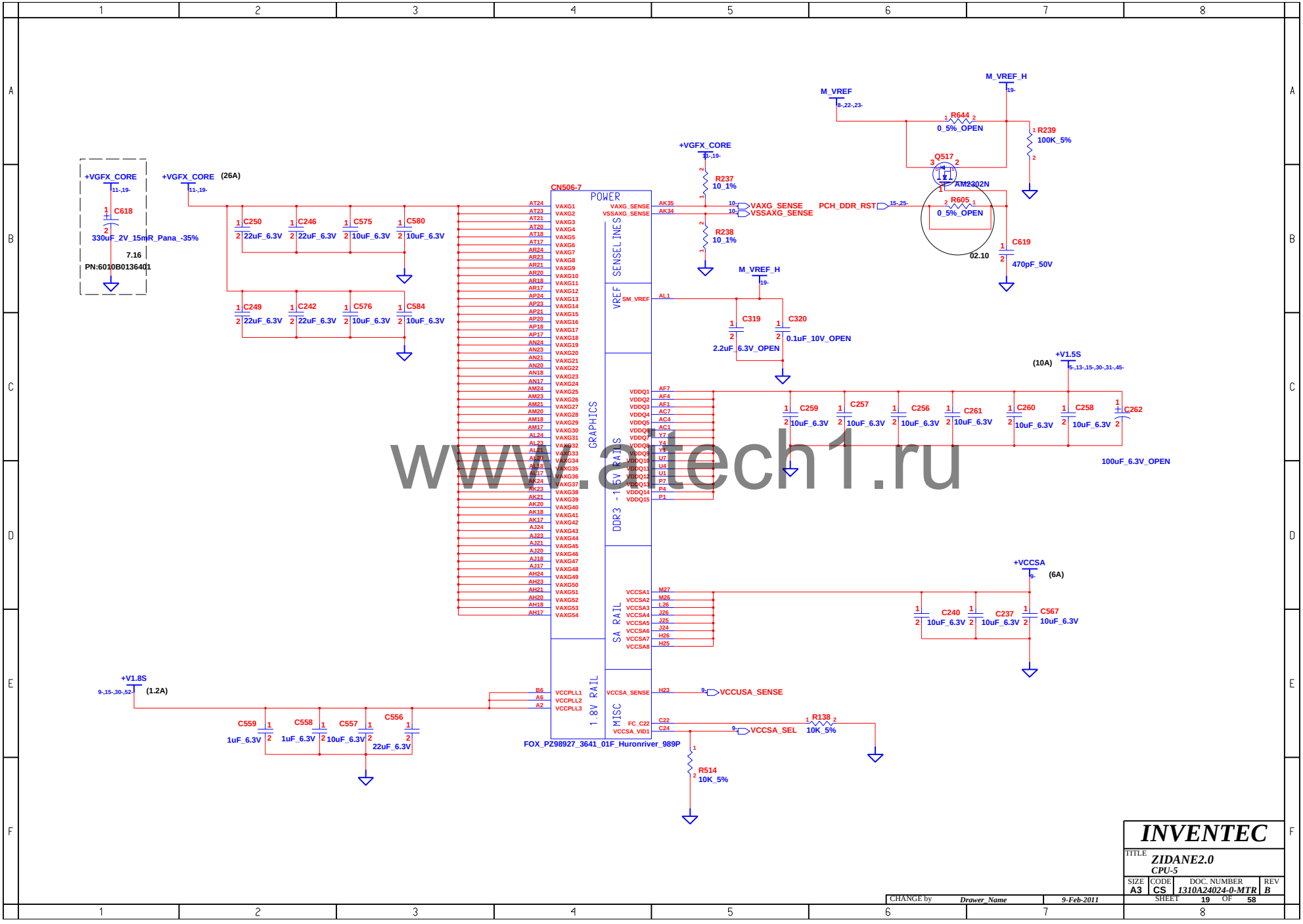

www.atech1.ru

INVENTEC			
TITLE ZIDANE2.0 CPU-5			
SIZE A3	CODE CS	DOC. NUMBER 1310A24024-0-MTR	REV B
CHANGE by Drawer_Name	9-Feb-2011	SHEET 19 OF 58	

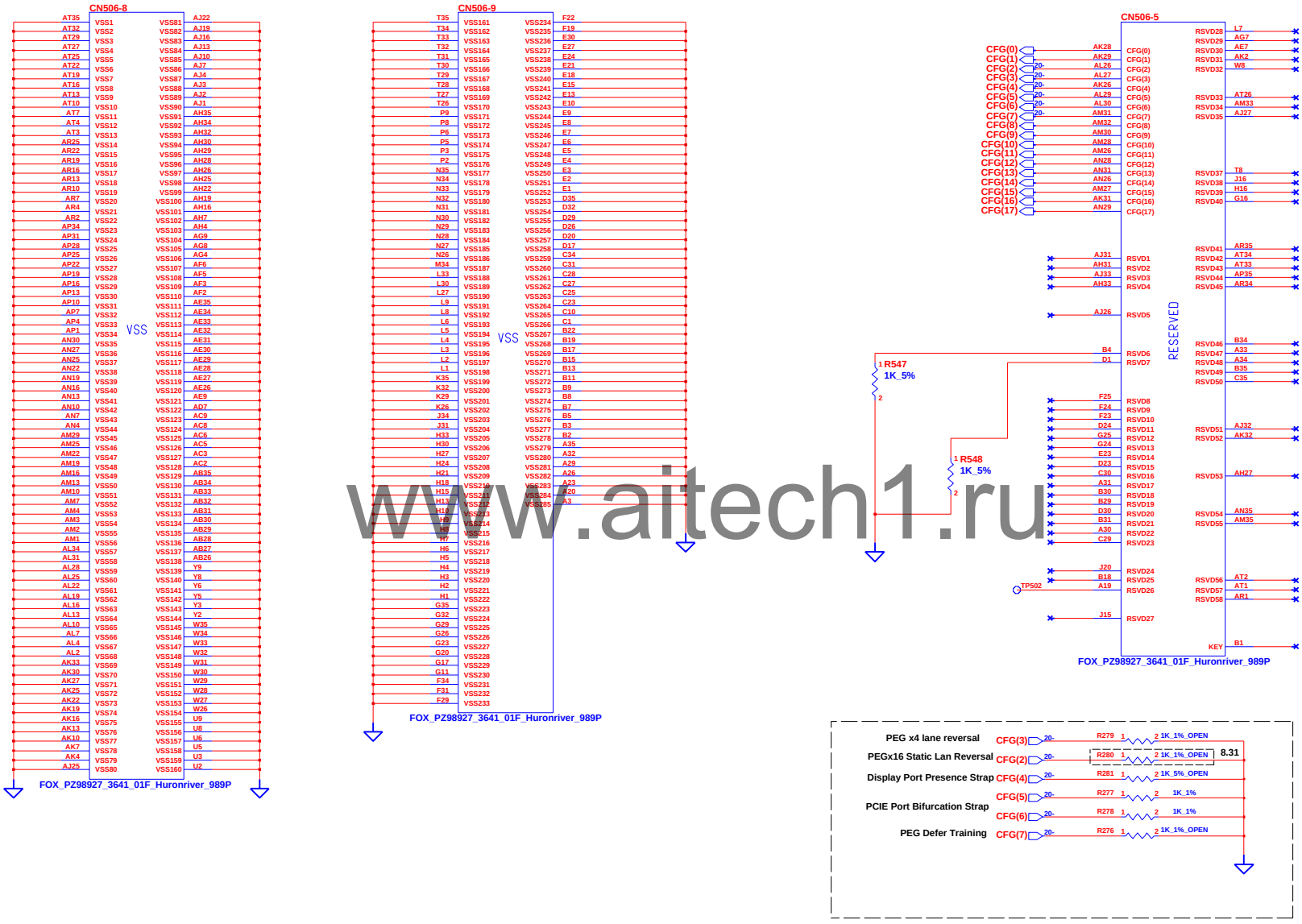

STRAP PIN

www.aitech1.ru

INVENTEC			
TITLE ZIDANE2.0 CPU-6			
SIZE A3	CODE CS	DOC. NUMBER 1310A24024-0-MTR	REV B
CHANGE by Drawer_Name	9-Feb-2011	SHEET 20 OF 58	

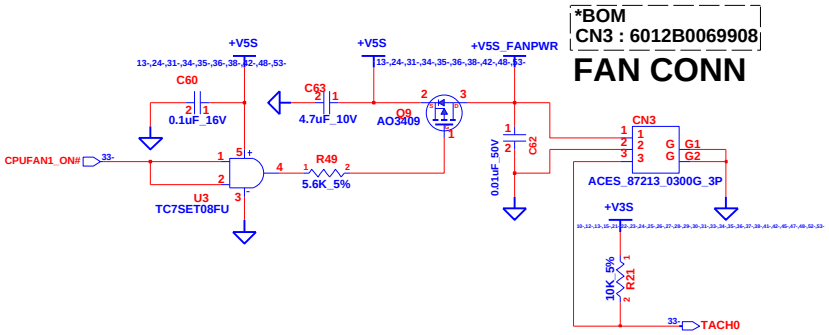

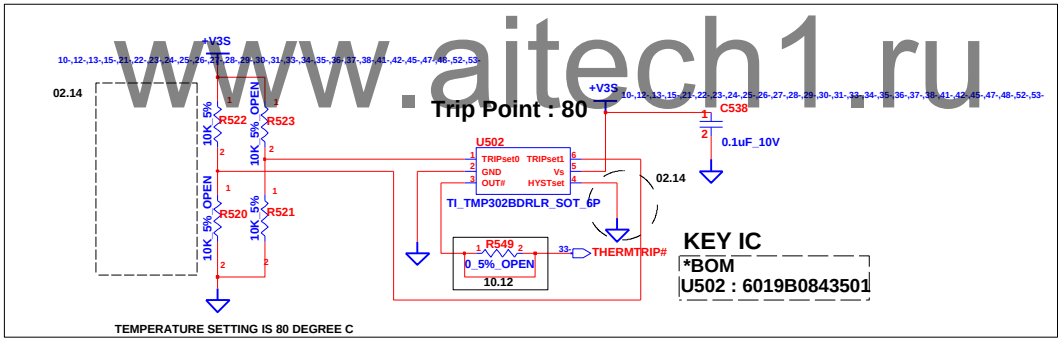

www.aitech1.ru

INVENTEC					
TITLE	ZIDANE2.0 Thermal, Fan & XDP				
SIZE	CODE	DOC. NUMBER	REV		
A3	CS	1310A24024-0-MTR	B		
CHANGE by	Drawer_Name	9-Feb-2011	SHEET 21 OF 58		

DDR3 SO-DIMM 1

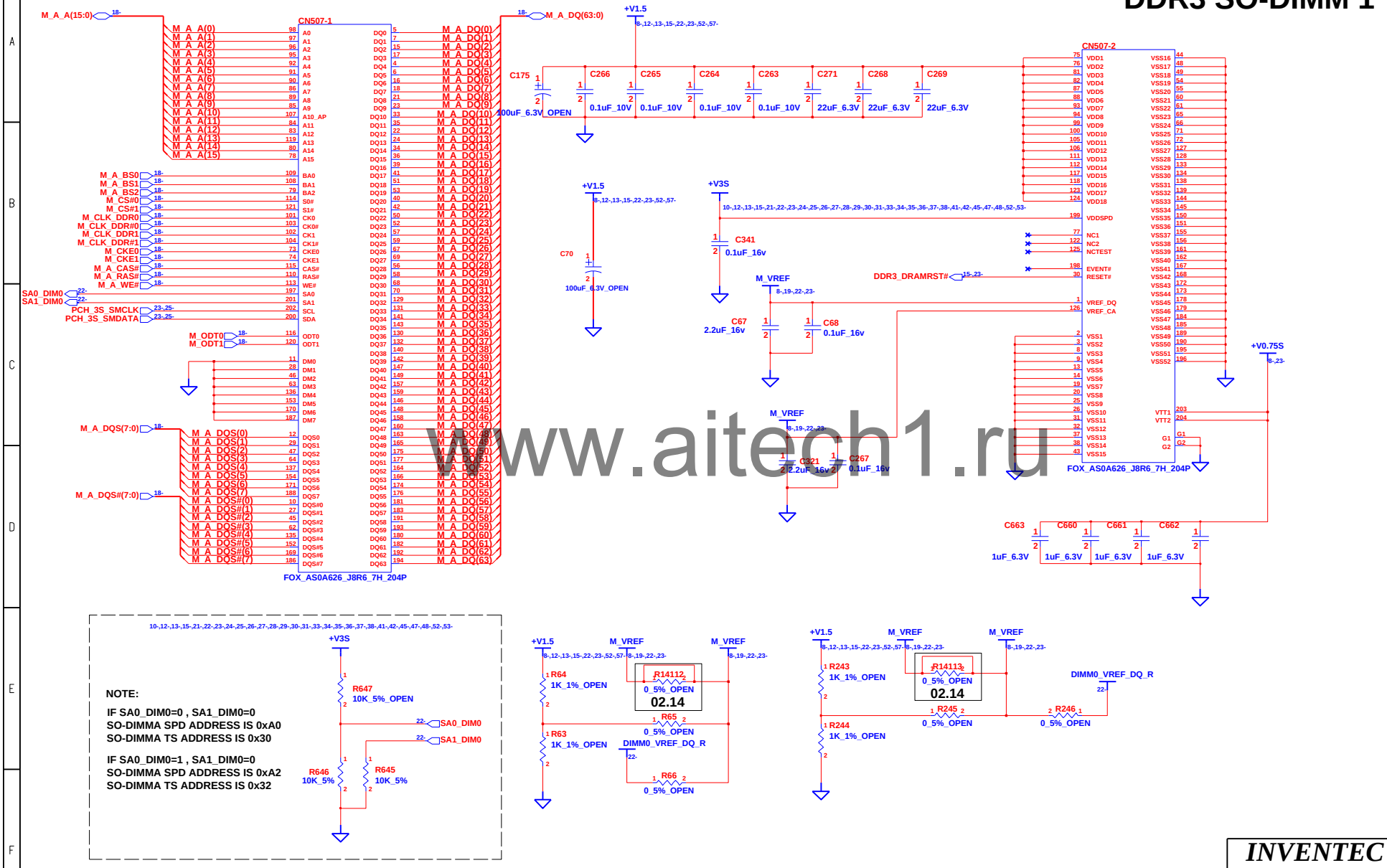

www.aitech1.ru

INVENTEC			
TITLE ZIDANE2.0 DDR3-1			
SIZE A3	CODE CS	DOC. NUMBER 1310A24024-0-MTR	REV B
CHANGE by Drawer_Name	9-Feb-2011	SHEET 22 OF 58	

DDR3 SO-DIMM 2

CN508(lower) : 6026B0121102
*BOM

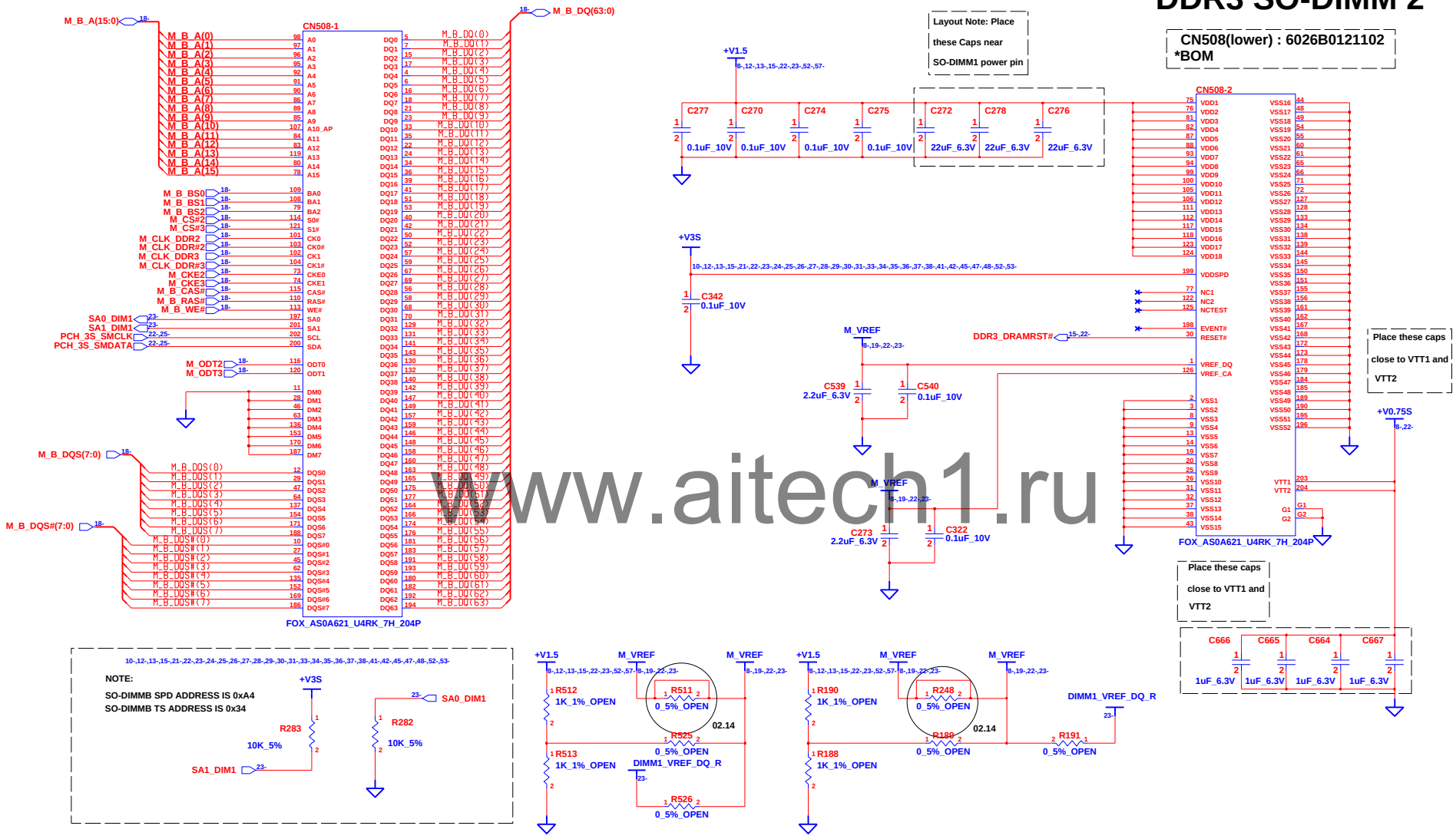

www.aitech1.ru

INVENTEC

TITLE: ZIDANE2.0
DDR3-2

SIZE	CODE	DOC. NUMBER	REV
A3	CS	1310A24024-0-MTR	B

SHEET 23 OF 58

CHANGE by Drawer_Name 9-Feb-2011

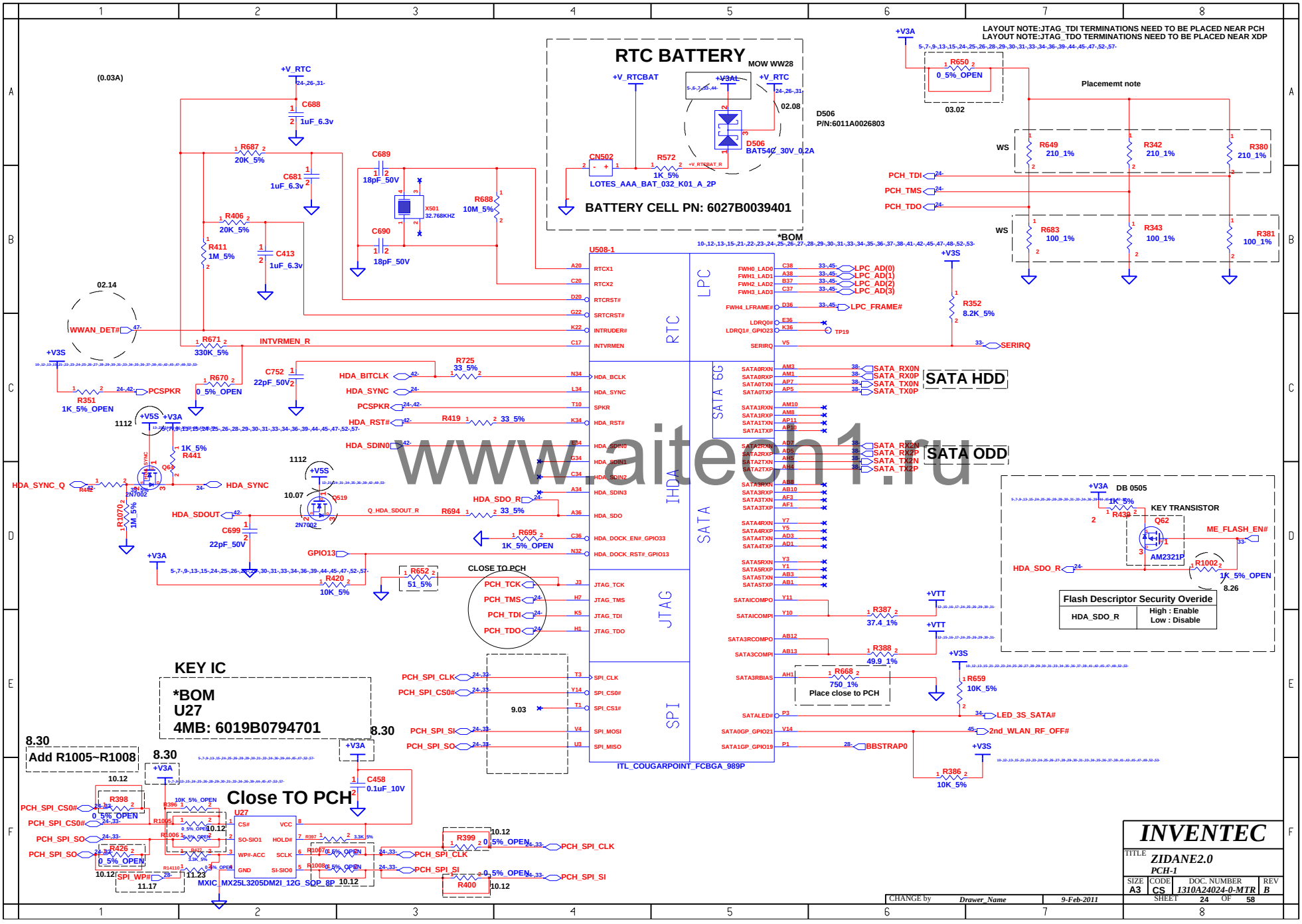

www.aiten1.ru

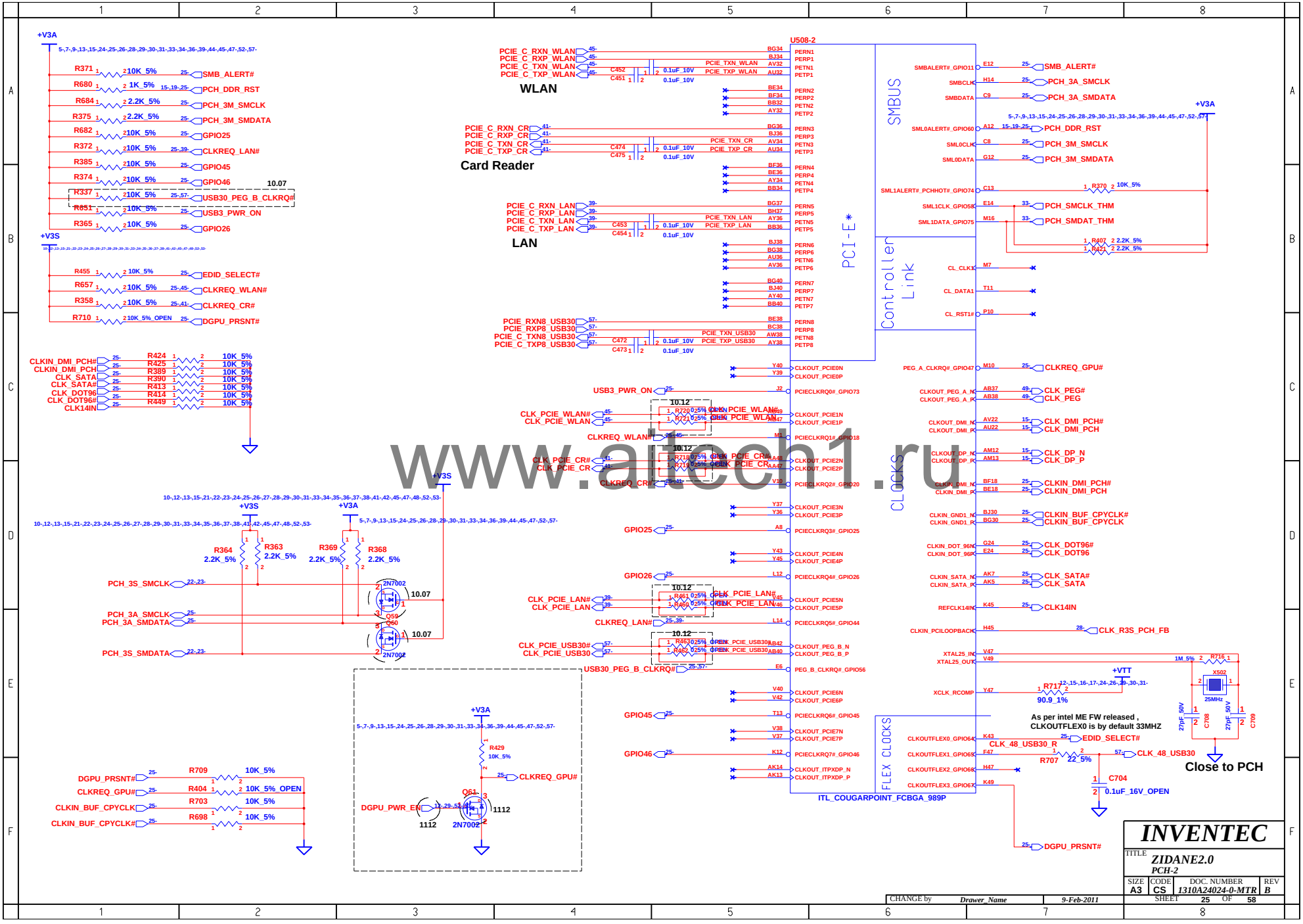

www.atech1.ru

Note: 1.SLP_SUS and SUSACK# are NC if DSW is not supported
2.DPWROK should connect to RSMRST# if DSW not supported
3.PCH_DPWROK pull up to +V3S enables DSW wupport. No install R5261 to disable DSW

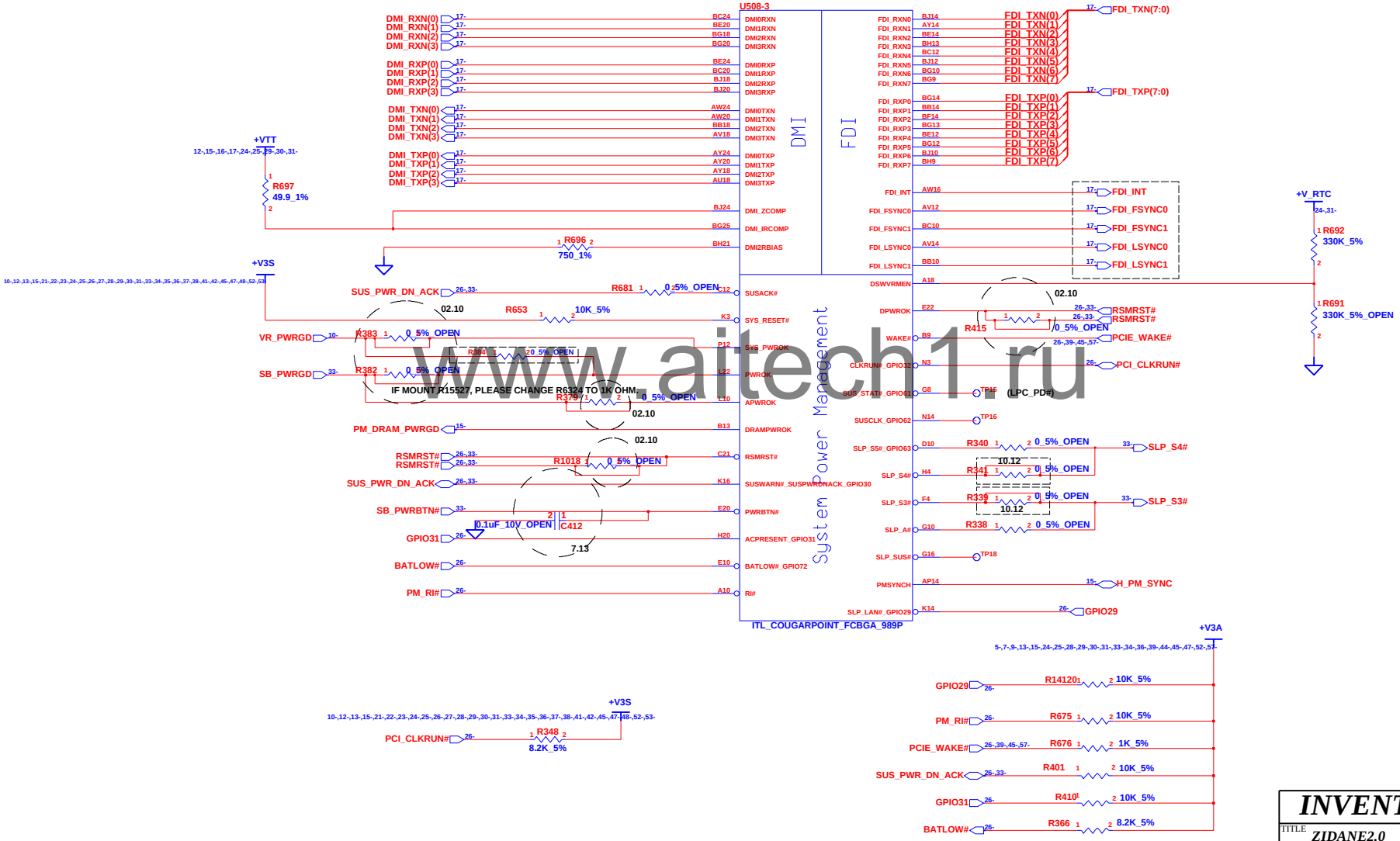

www.aitech1.ru

INVENTEC			
TITLE ZIDANE2.0 PCH-3			
SIZE A3	CODE CS	DOC. NUMBER 1310A24024-0-MTR	REV B
CHANGE by Drawer_Name	9-Feb-2011	SHEET 26 OF 58	

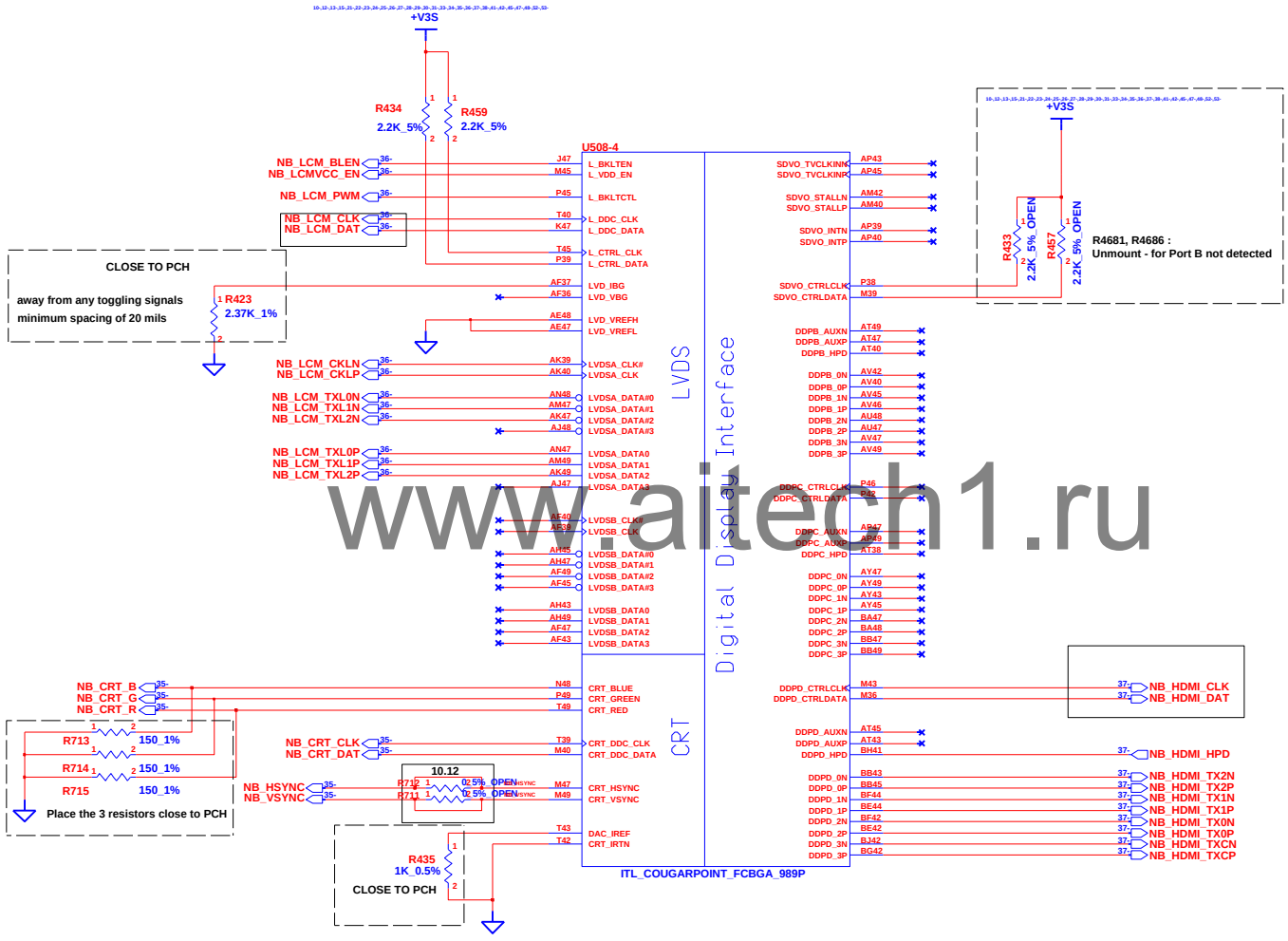

www.aitech1.ru

CHANGE by	Drawer_Name	9-Feb-2011	

INVENTEC

TITLE: *ZIDANE2.0*
PCH-4

SIZE	CODE	DOC. NUMBER	REV
A3	CS	1310A24024-0-MTR	B

SHEET 27 OF 58

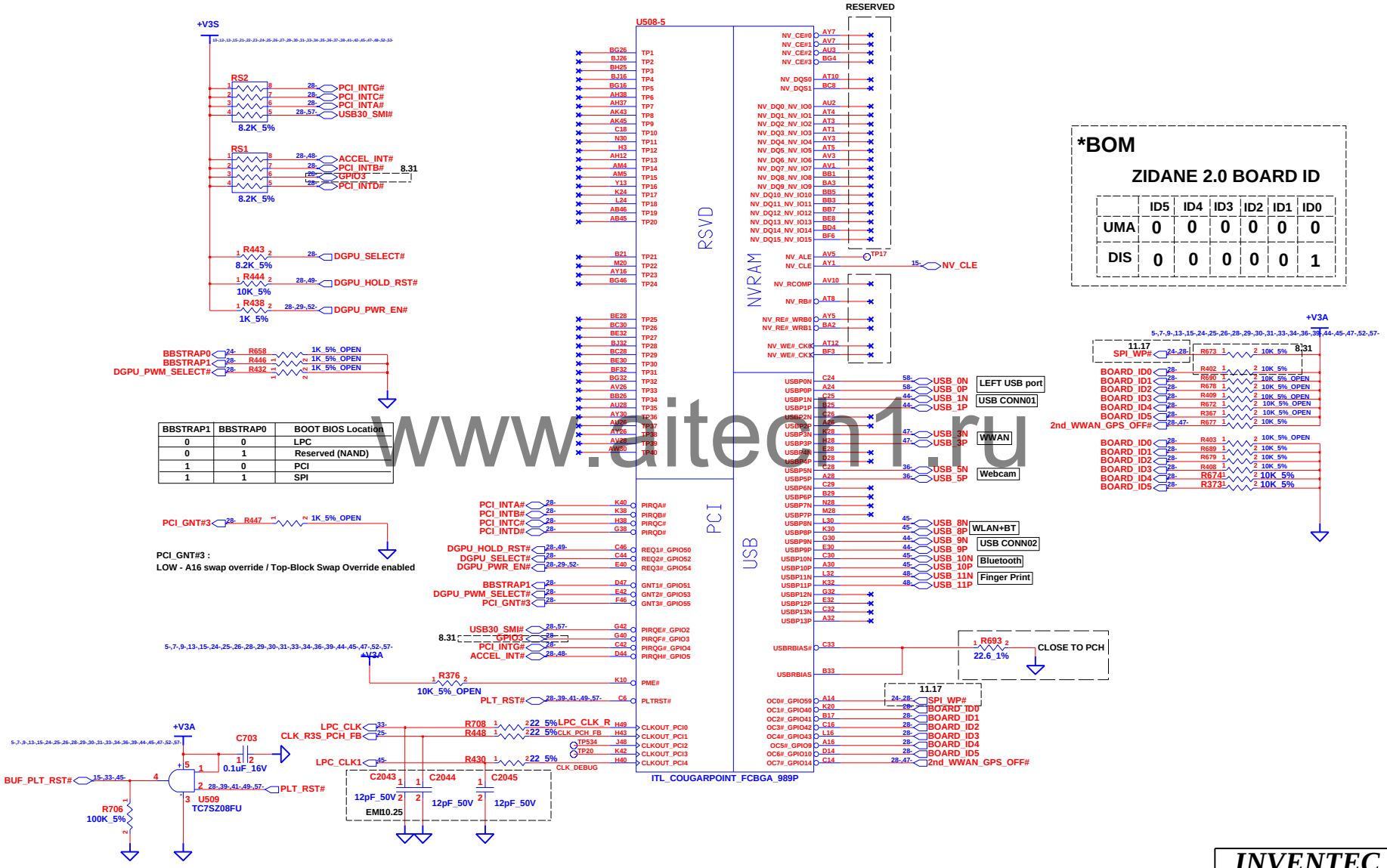

*BOM

ZIDANE 2.0 BOARD ID

	ID5	ID4	ID3	ID2	ID1	ID0
UMA	0	0	0	0	0	0
DIS	0	0	0	0	0	1

BBSTRAP1	BBSTRAP0	BOOT BIOS Location
0	0	LPC
0	1	Reserved (NAND)
1	0	PCI
1	1	SPI

PCI_GNT#3 :
LOW - A16 swap override / Top-Block Swap Override enabled

www.aitech1.ru

INVENTEC

TITLE ZIDANE2.0
PCH-5

SIZE	CODE	DOC. NUMBER	REV
A3	CS	1310A24024-0-MTR	B

SHEET 28 OF 58

CHANGE by Drawer_Name 9-Feb-2011

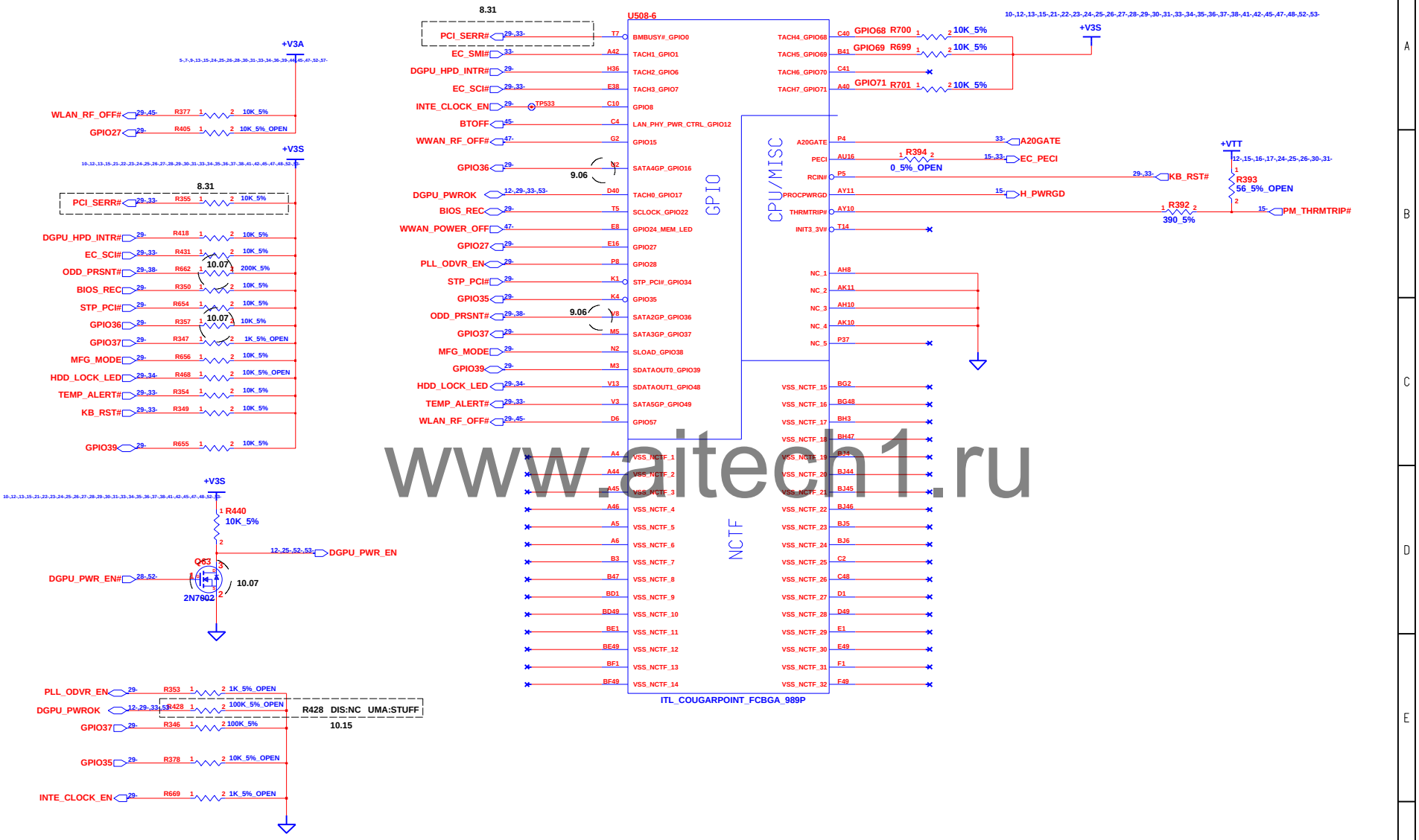

www.aitech1.ru

CHANGE by	Drawer_Name	9-Feb-2011	

INVENTEC

TITLE: ZIDANE2.0 PCH-6

SIZE	CODE	DOC. NUMBER	REV
A3	CS	1310A24024-0-MTR	B

SHEET 29 OF 58

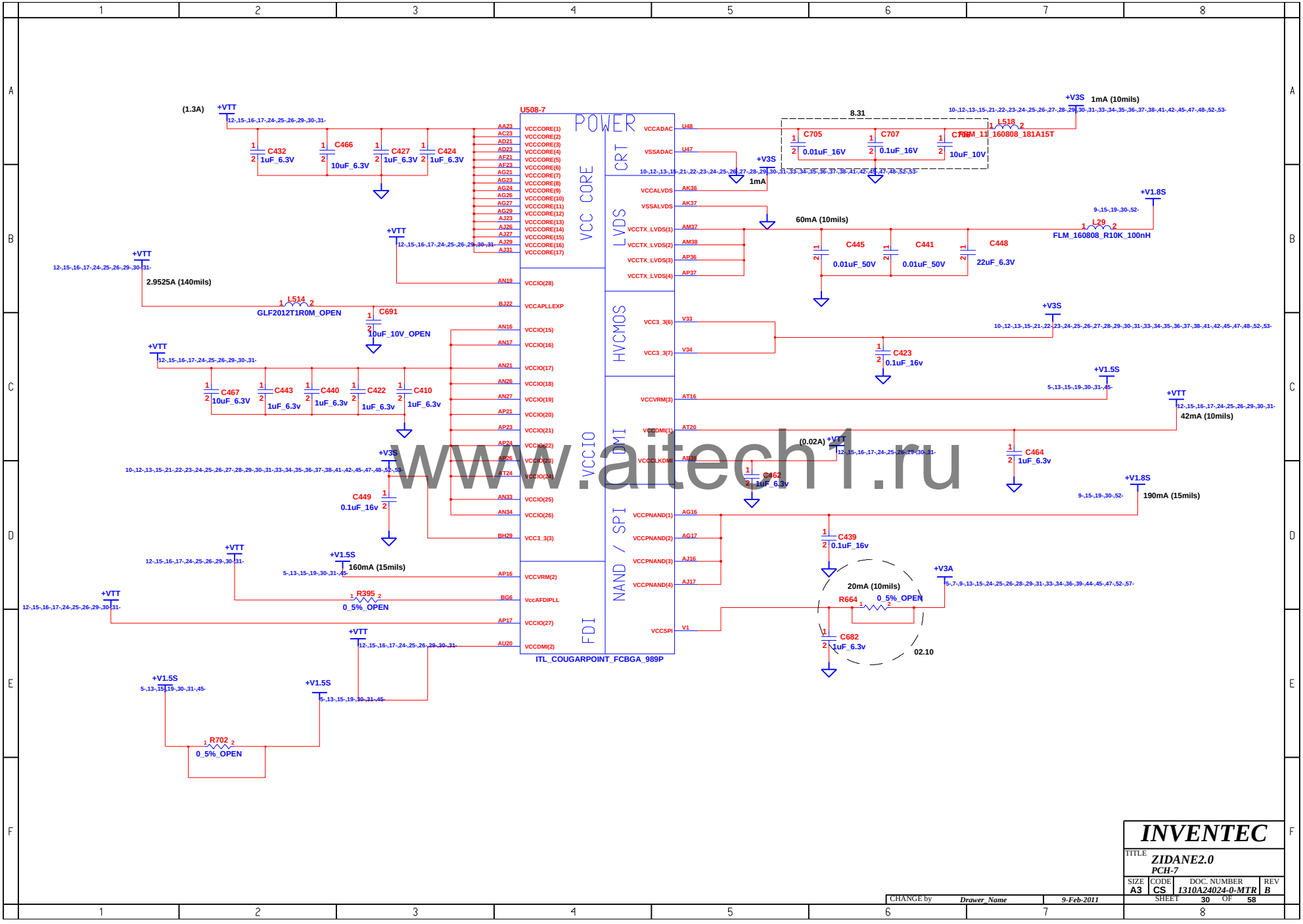

www.aitech1.ru

INVENTEC			
TITLE ZIDANE2.0 PCH-7			
SIZE A3	CODE CS	DOC. NUMBER 1310A24024-0-MTR	REV B
CHANGE by Drawer_Name	9-Feb-2011	SHEET 30 OF 58	

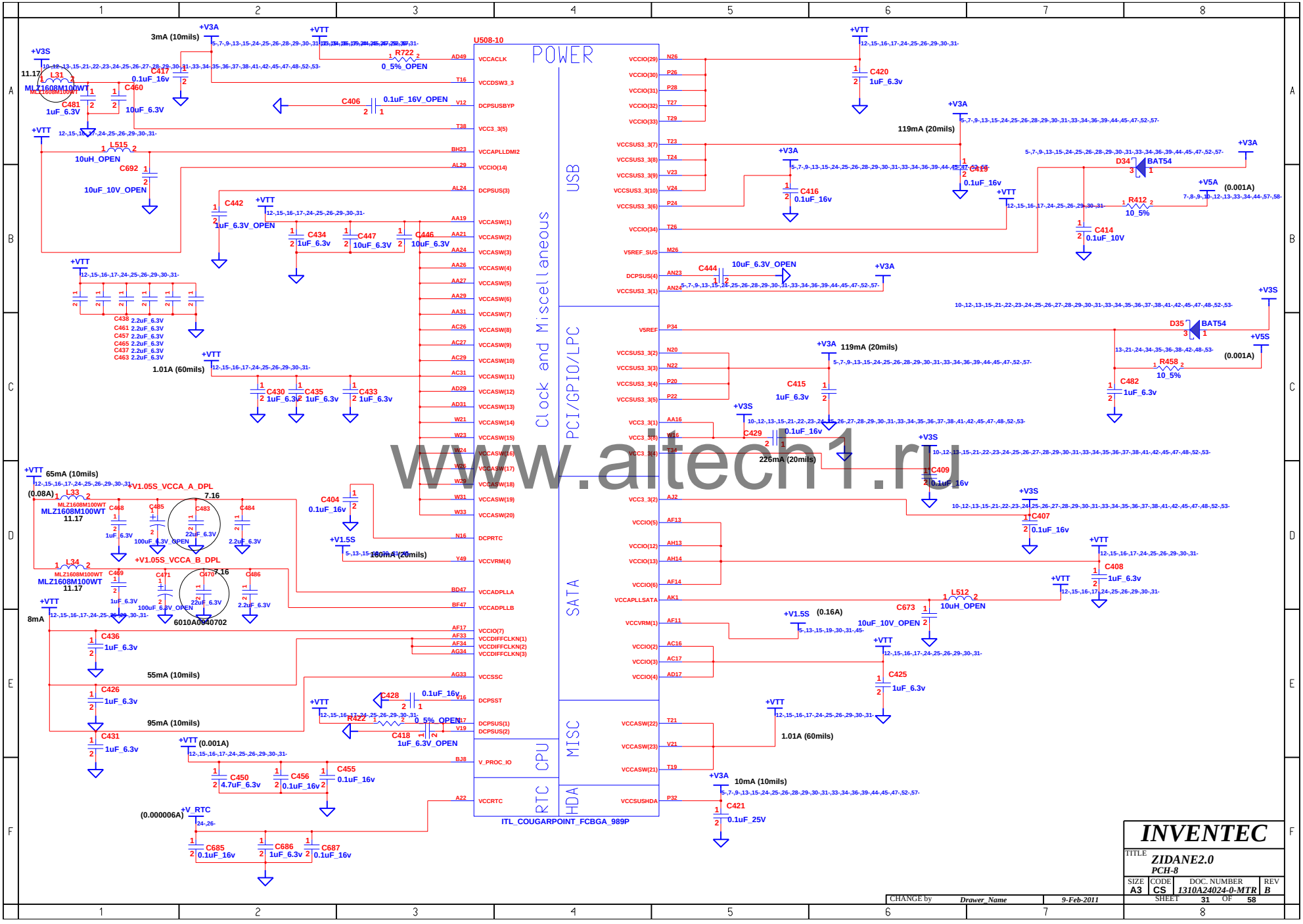

www.aitech1.ru

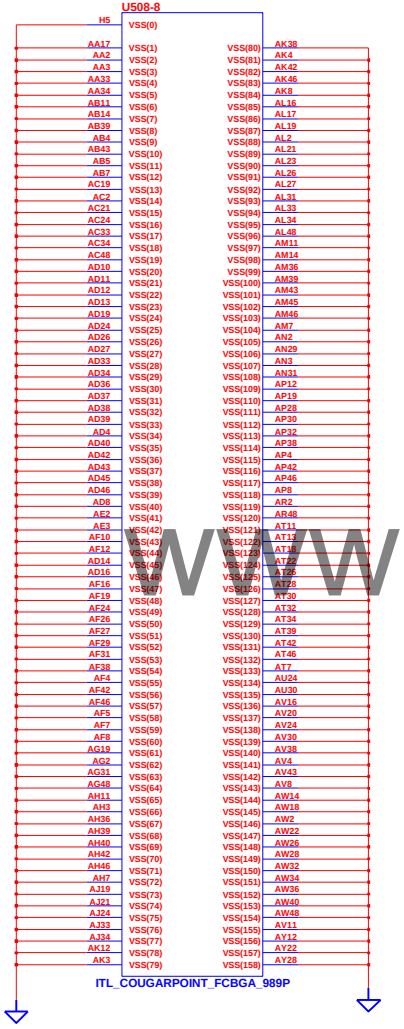

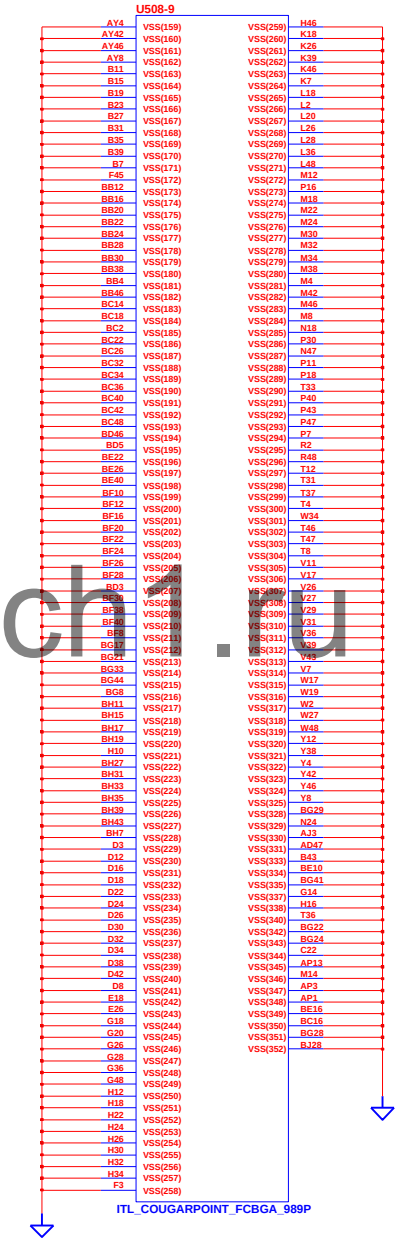

www.aitech.u

CHANGE by	Drawer_Name	9-Feb-2011	

INVENTEC

TITLE *ZIDANE2.0*
PCH-9

SIZE	CODE	DOC. NUMBER	REV
A3	CS	1310A24024-0-MTR	B

SHEET 32 OF 58

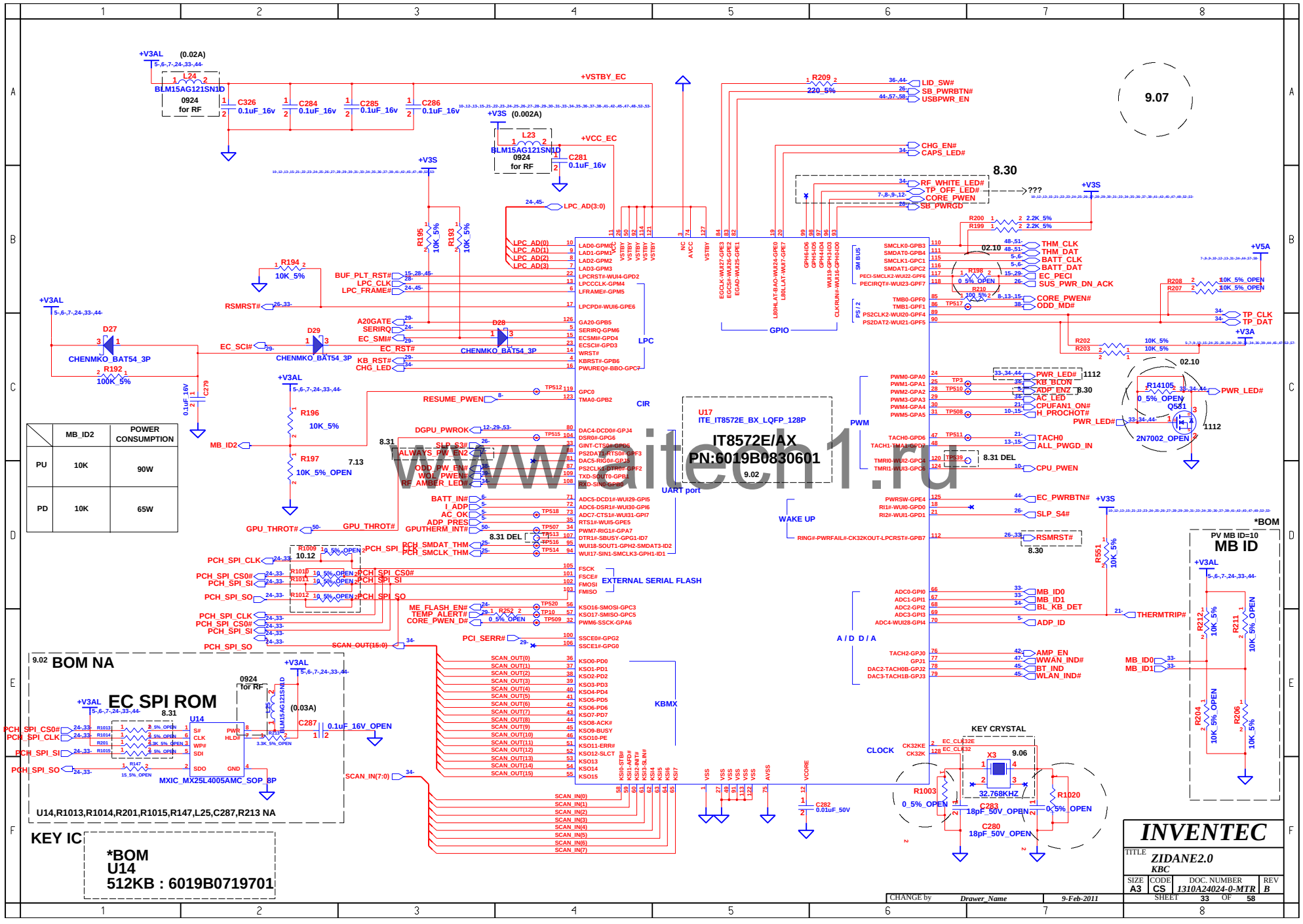

www.itech1.ru

KeyBoard CONN (30 pin)

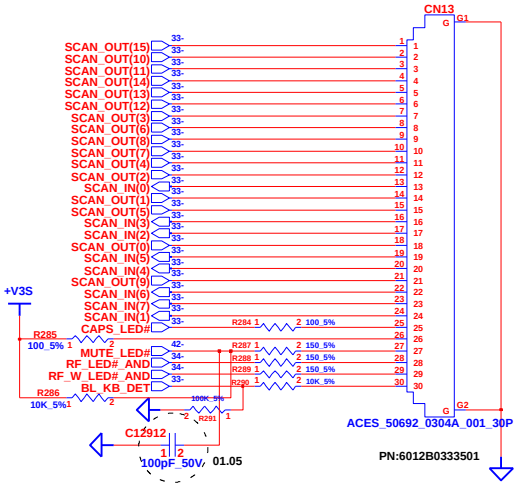

TouchPad Module CONN

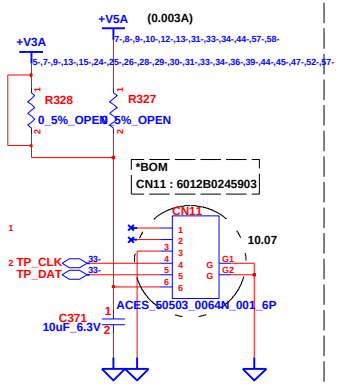

DC-JACK LED

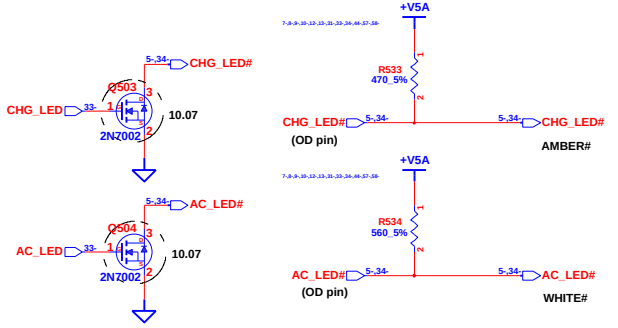

TO MB 10.14

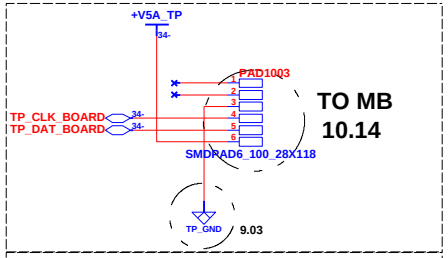

TO TP 9.03

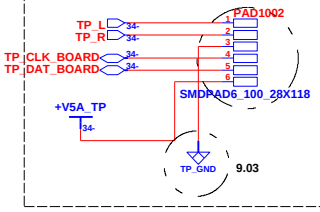

TP-BOARD

www.aitech1.ru

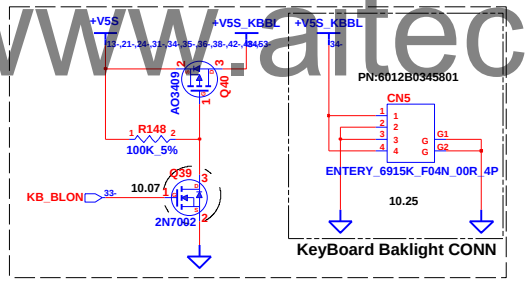

SATA LED & HDD-HALTED LED

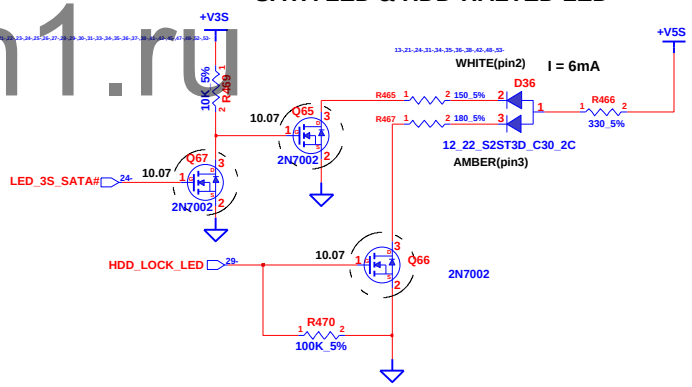

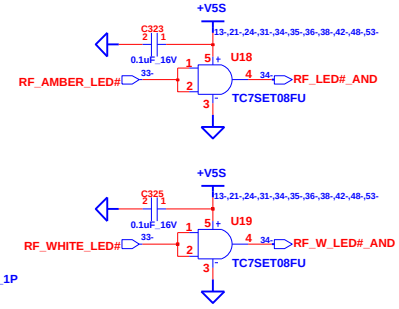

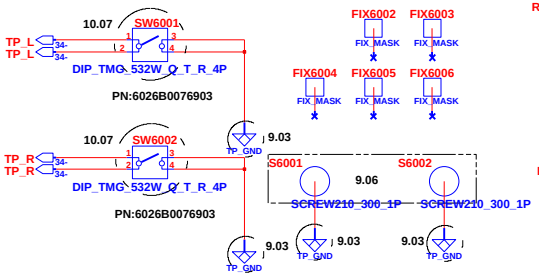

POWER LED

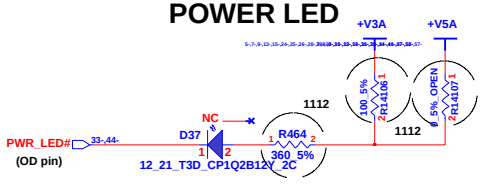

CHANGE by	Drawer_Name	9-Feb-2011

INVENTEC

TITLE: *ZIDANE2.0*
Keyboard & TouchPad

SIZE	CODE	DOC. NUMBER	REV
A3	CS	1310A24024-0-MTR	B

SHEET 34 OF 58

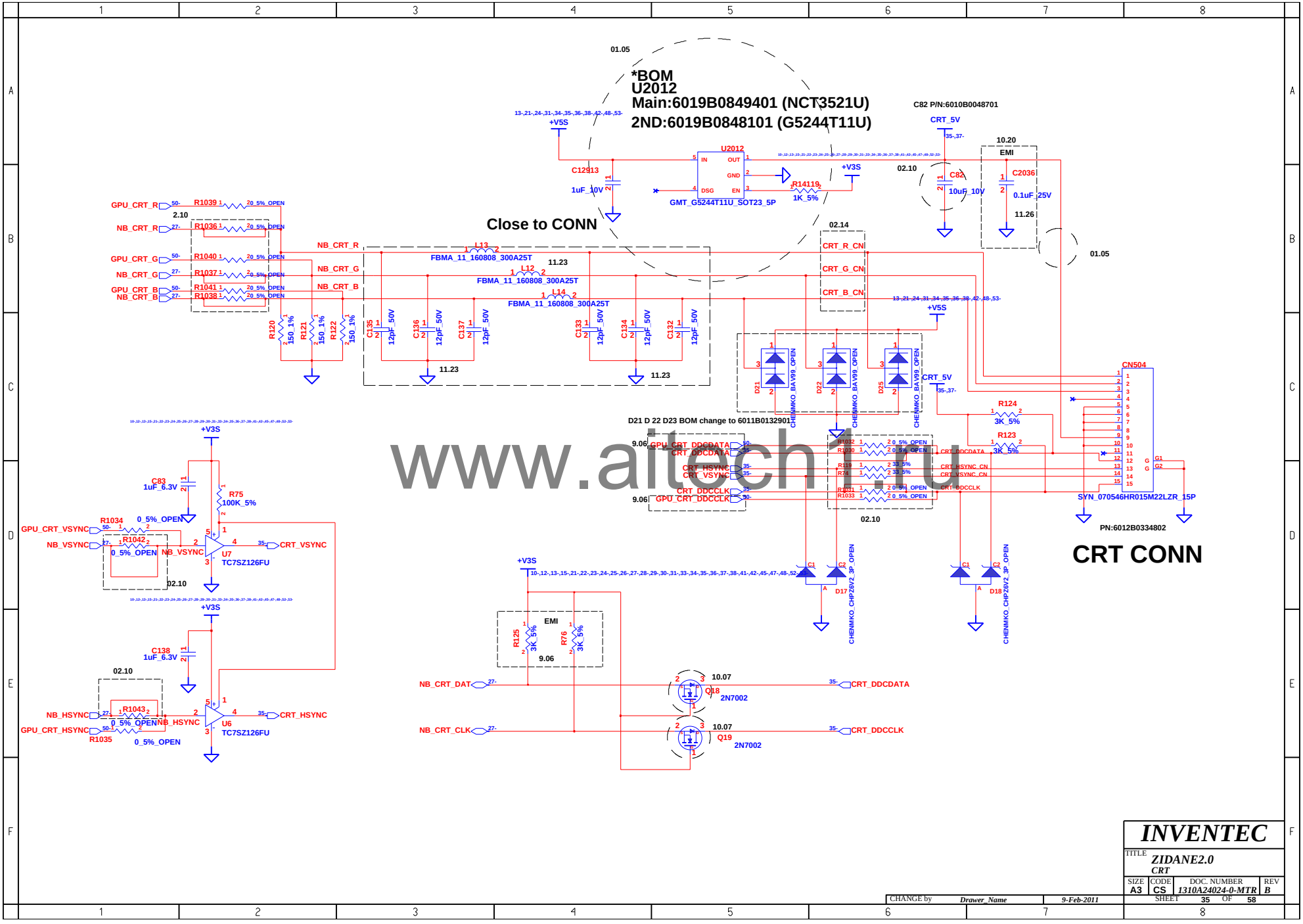

www.aitech.ru

INVENTEC			
TITLE ZIDANE2.0 CRT			
SIZE A3	CODE CS	DOC. NUMBER 1310A24024-0-MTR	REV B
CHANGE by Drawer_Name	9-Feb-2011	SHEET 35 OF 58	

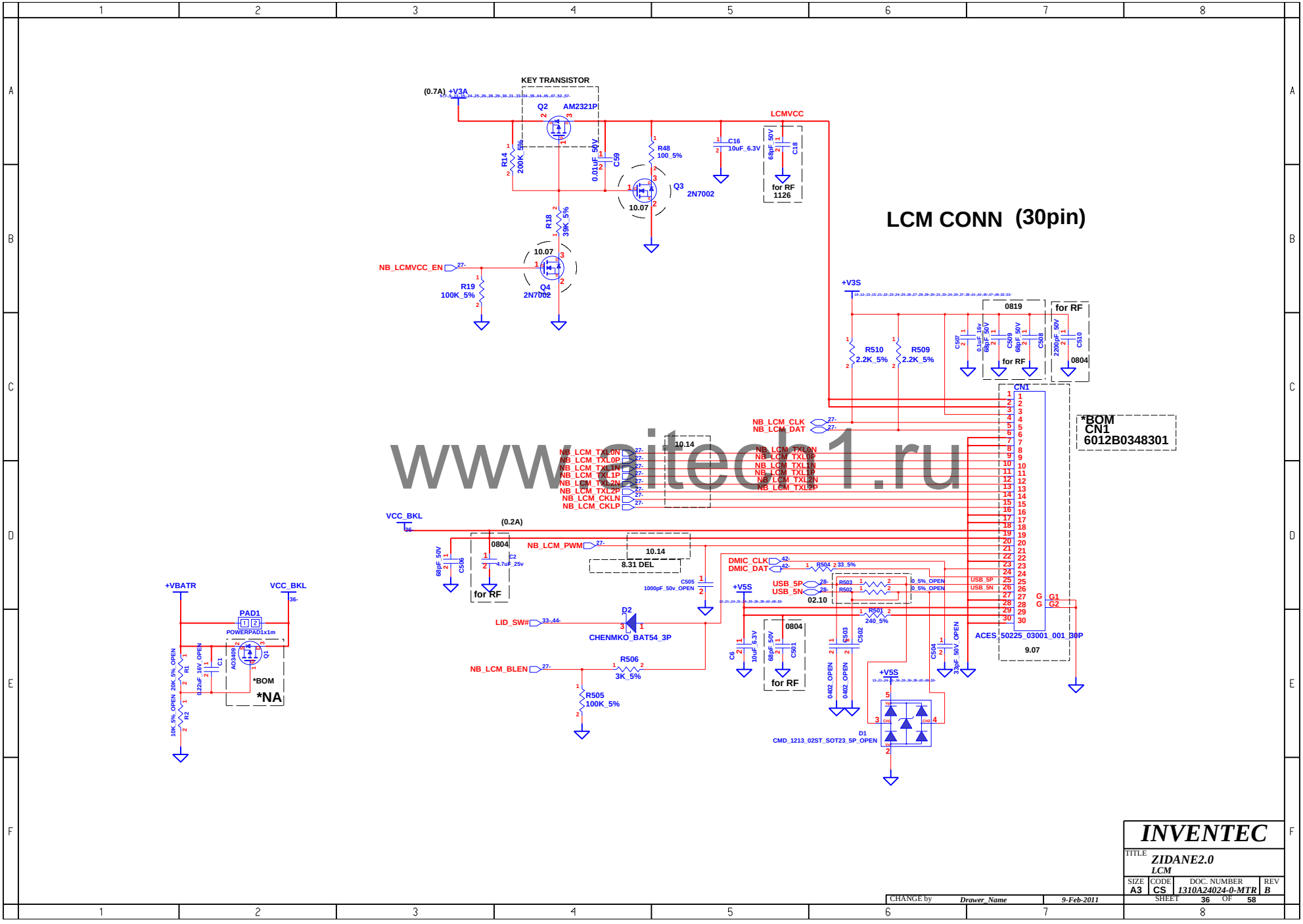

www.eitech1.ru

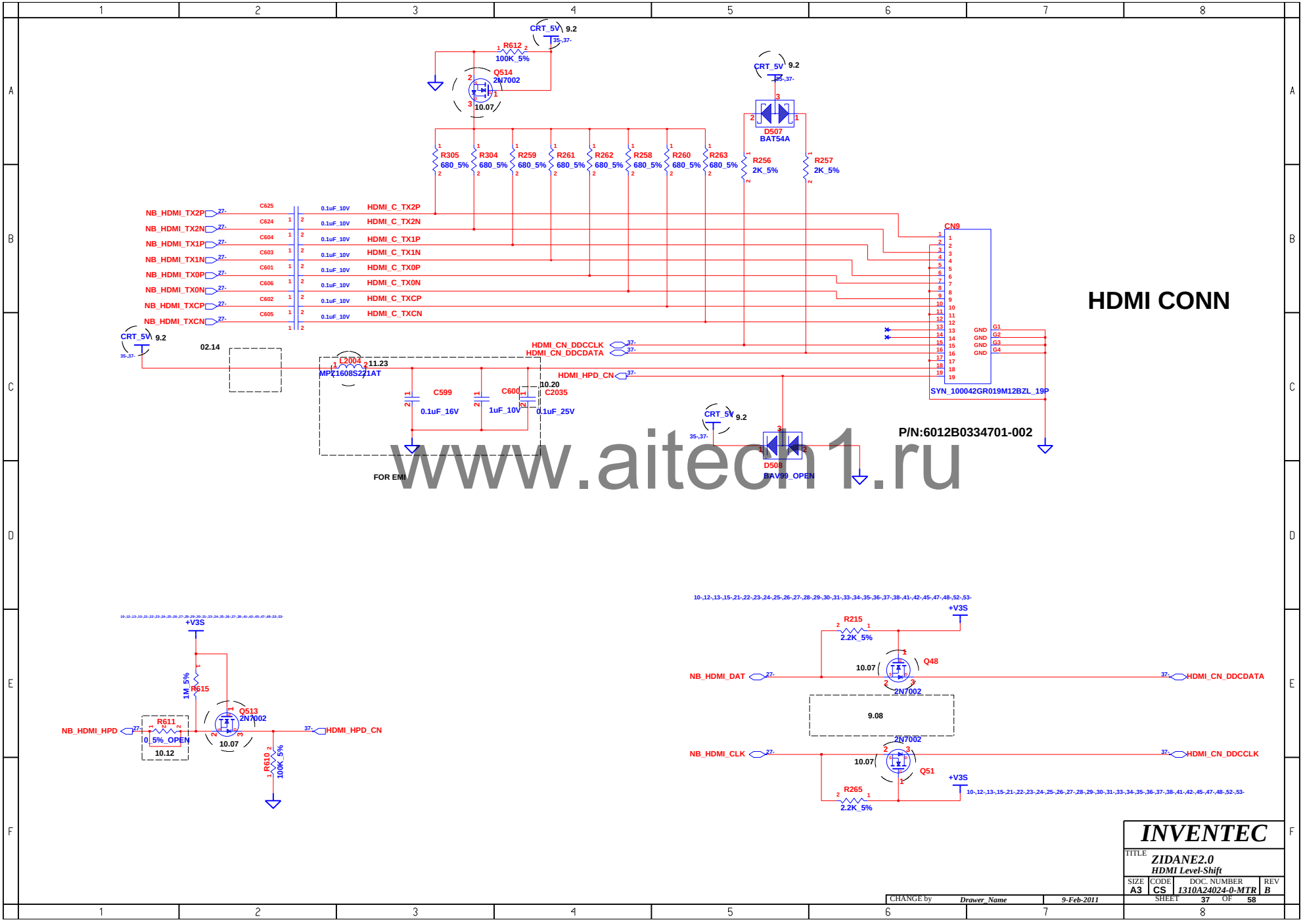
HDMI CONN
P/N:6012B0334701-002
CRT_5V 9.2
R612 100K_5%
Q514 2N7002
10.07
D507 BAT54A
R305 680_5%
R304 680_5%
R259 680_5%
R261 680_5%
R262 680_5%
R258 680_5%
R260 680_5%
R263 680_5%
R256 2K_5%
R257 2K_5%
NB_HDMI_TX2P
NB_HDMI_TX2N
NB_HDMI_TX1P
NB_HDMI_TX1N
NB_HDMI_TX0P
NB_HDMI_TX0N
NB_HDMI_TXCP
NB_HDMI_TXCN
C625
C624
C604
C603
C601
C606
C602
C605
0.1uF_10V
HDMI_C_TX2P
HDMI_C_TX2N
HDMI_C_TX1P
HDMI_C_TX1N
HDMI_C_TX0P
HDMI_C_TX0N
HDMI_C_TXCP
HDMI_C_TXCN
CN9
SYN_100042GR019M12BZL_19P
GND
G1
G2
G3
G4
HDMI_CN_DDCCLK
HDMI_CN_DDCDATA
HDMI_HPD_CN
02.14
L2004 MPZ1608S221AT
11.23
C599 0.1uF_16V
C600 1uF_10V
C2035 0.1uF_25V
10.20
FOR EMI
D508 BAV99_OPEN
www.aitech1.ru
+V3S
R615 1M_5%
Q513 2N7002
R611 0_5%_OPEN
10.12
R610 100K_5%
NB_HDMI_HPD
HDMI_HPD_CN
R215 2.2K_5%
Q48
NB_HDMI_DAT
HDMI_CN_DDCDATA
9.08
NB_HDMI_CLK
HDMI_CN_DDCCLK
Q51
R265 2.2K_5%
INVENTEC
TITLE
ZIDANE2.0
HDMI Level-Shift
SIZE A3
CODE CS
DOC. NUMBER 1310A24024-0-MTR
REV B
SHEET 37 OF 58
CHANGE by Drawer_Name
9-Feb-2011

SATA HDD FPC CONN on MB

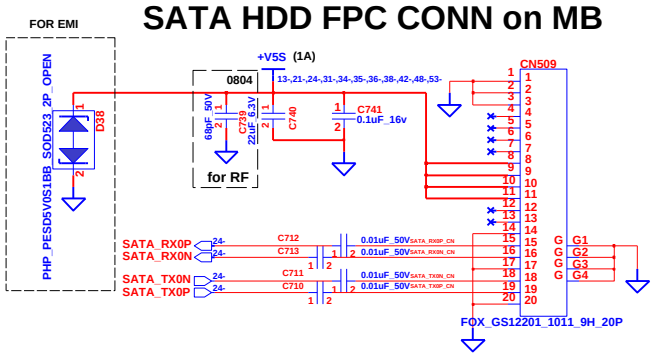

CN509 : 6012B0238201-003

www.aitech1.ru

SATA ODD FPC CONN on MB

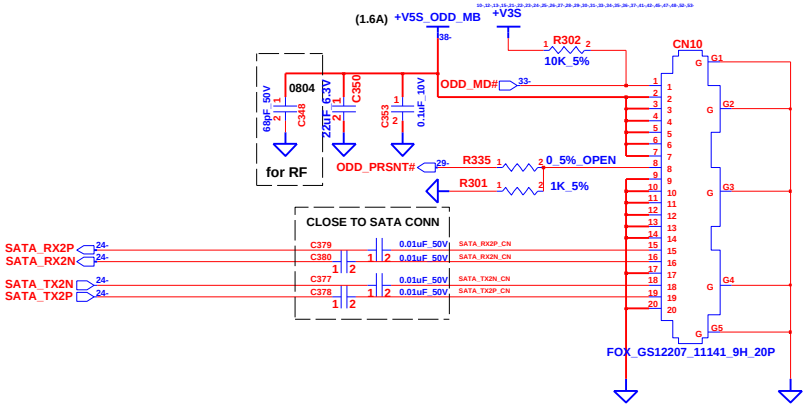

CN10 : 6012B0345501

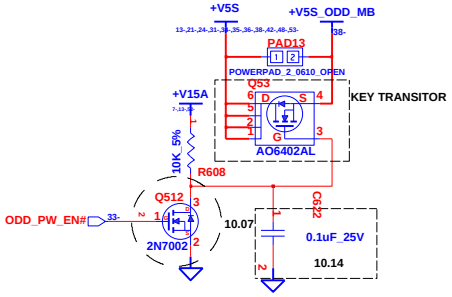

CHANGE by	Drawer_Name	9-Feb-2011	

INVENTEC

TITLE: *ZIDANE2.0*
SATA HDD & ODD

SIZE	CODE	DOC. NUMBER	REV
A3	CS	1310A24024-0-MTR	B

SHEET 38 OF 58

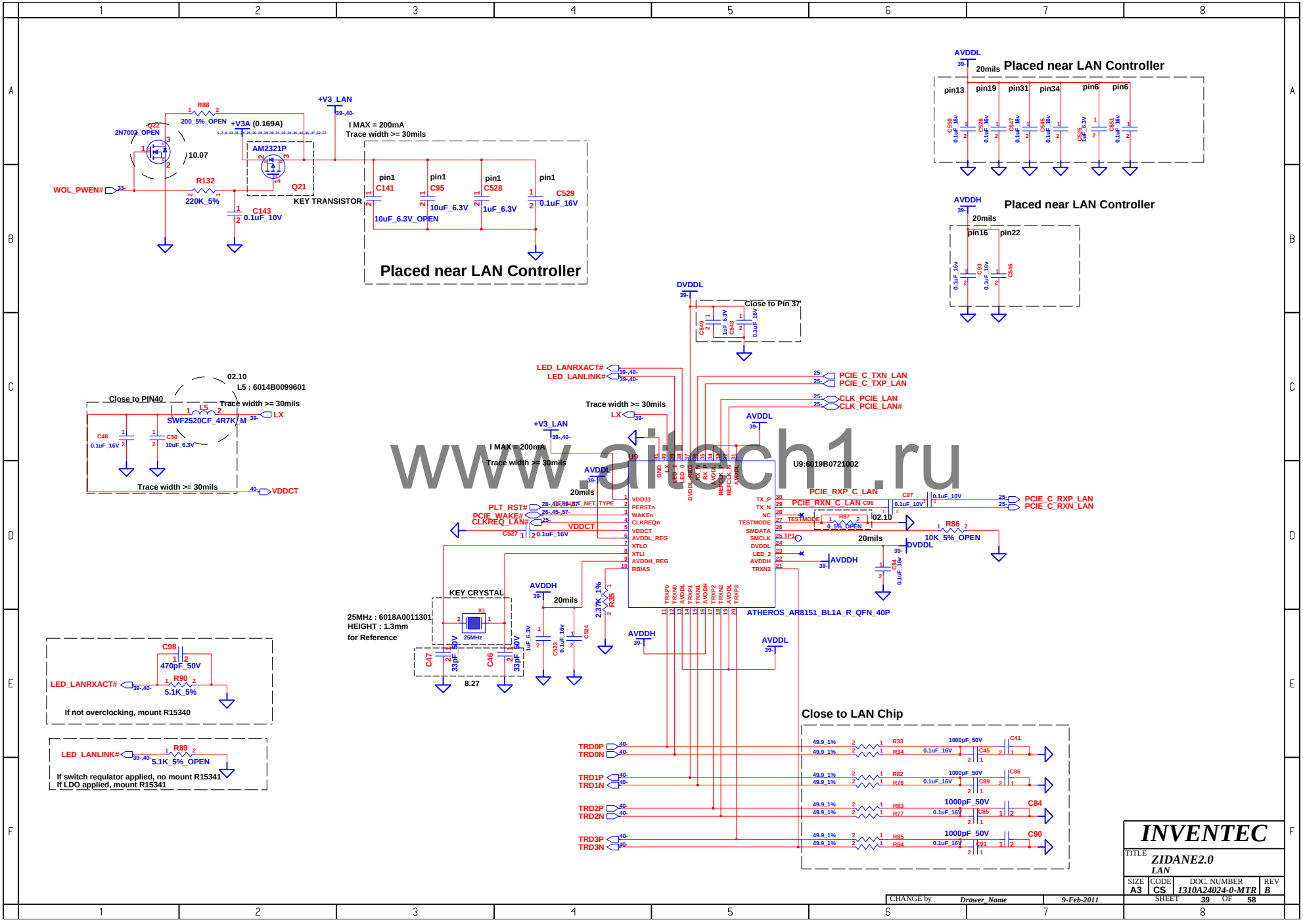

www.aitech1.ru

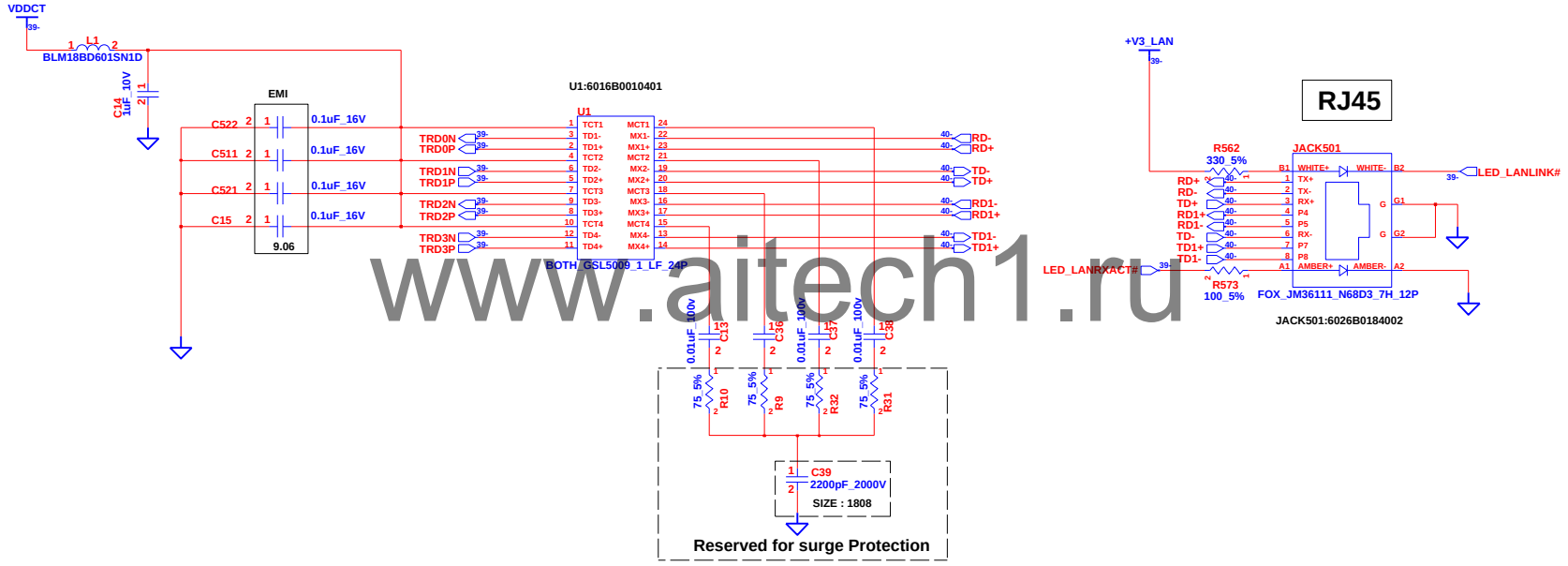

www.aitech1.ru

LAYOUT NOTE : Place termination resistors and caps as close to LAN controller as possible

INVENTEC			
TITLE ZIDANE2.0 RJ-45			
SIZE A3	CODE CS	DOC. NUMBER 1310A24024-0-MTR	REV B
CHANGE by Drawer_Name	9-Feb-2011	SHEET 40 OF 58	

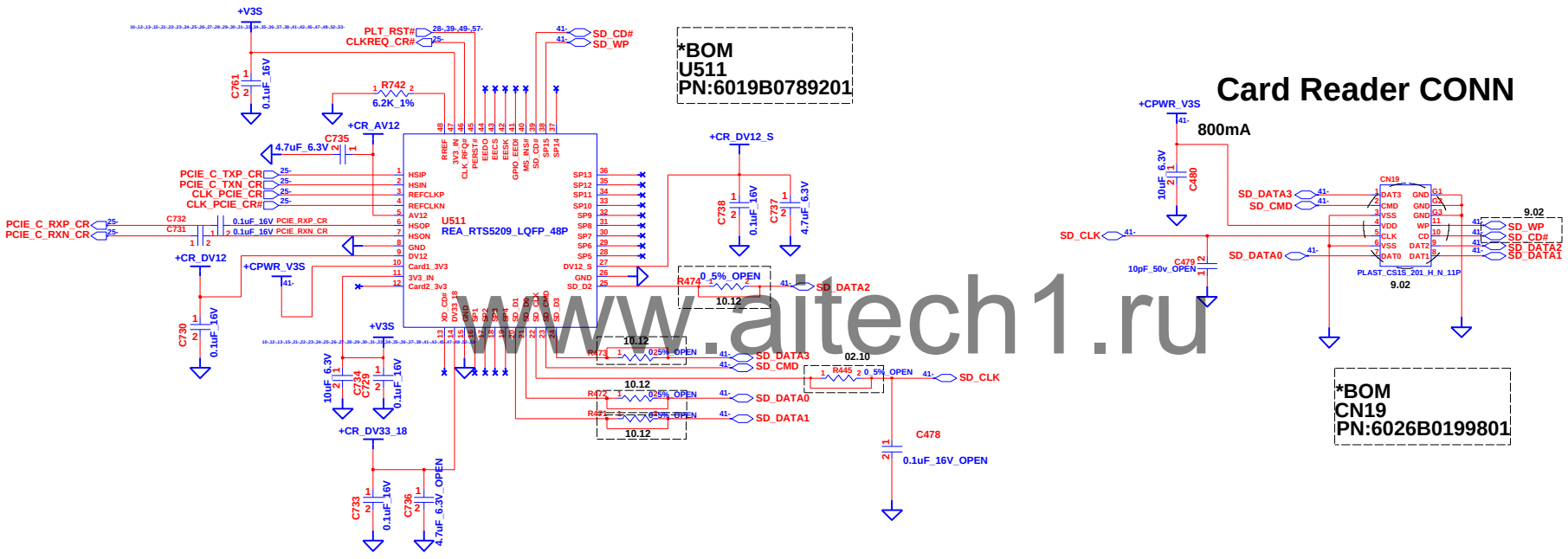

www.aitech1.ru

CHANGE by	Drawer_Name	9-Feb-2011	

INVENTEC

TITLE: *ZIDANE2.0*
Card Reader

SIZE	CODE	DOC. NUMBER	REV
A3	CS	1310A24024-0-MTR	B

SHEET 41 OF 58

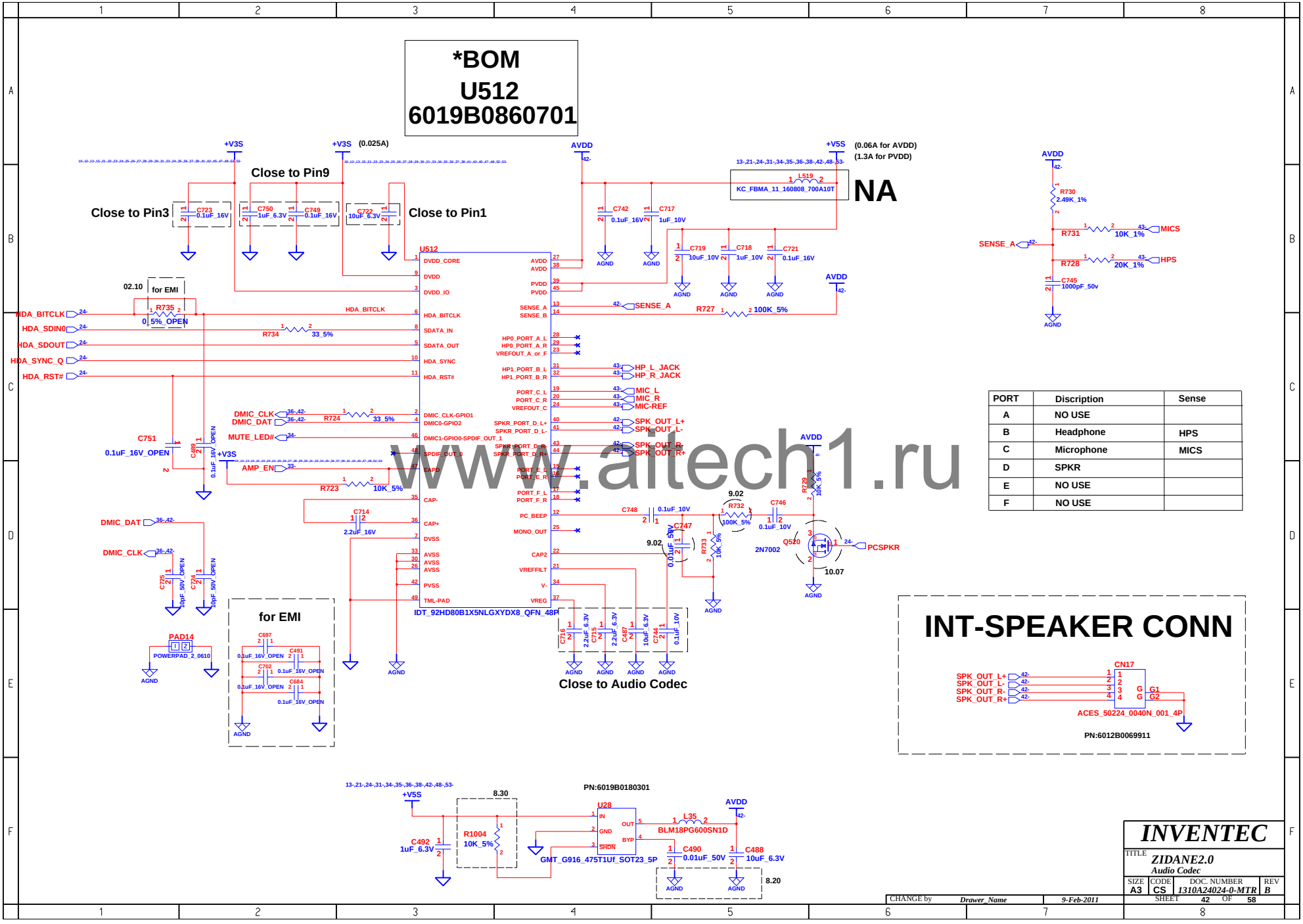

PORT	Discription	Sense
A	NO USE	
B	Headphone	HPS
C	Microphone	MICS
D	SPKR	
E	NO USE	
F	NO USE	

www.aitech1.ru

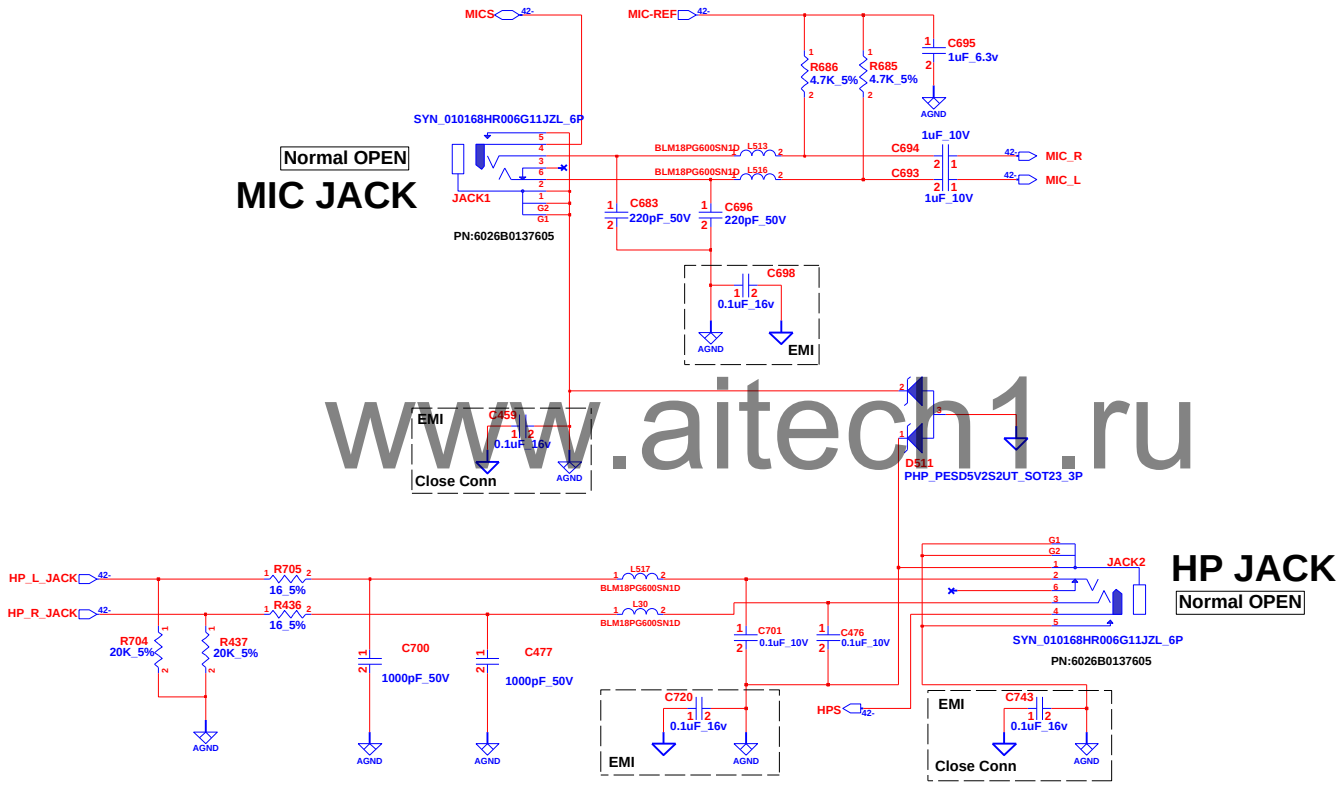

www.aitech1.ru

INVENTEC			
TITLE ZIDANE2.0 HP JACK & MIC JACK			
SIZE A3	CODE CS	DOC. NUMBER 1310A24024-0-MTR	REV B
CHANGE by Drawer_Name	9-Feb-2011	SHEET 43 OF 58	

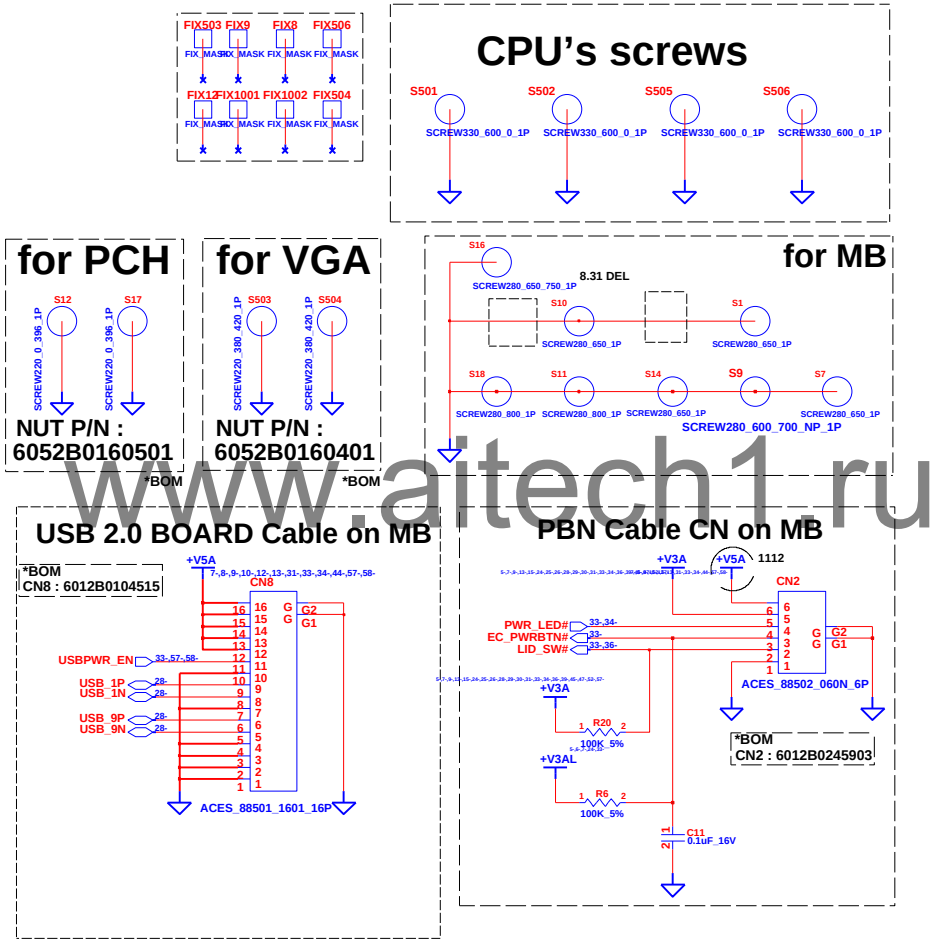

www.aitech1.ru

INVENTEC			
TITLE	ZIDANE2.0 ESATA, SCREW & LID		
SIZE A3	CODE CS	DOC. NUMBER 1310A24024-0-MTR	REV B
CHANGE by Drawer_Name	9-Feb-2011	SHEET 44 OF 58	

BLUETOOTH CONN

WLAN CONN (MINICARD)

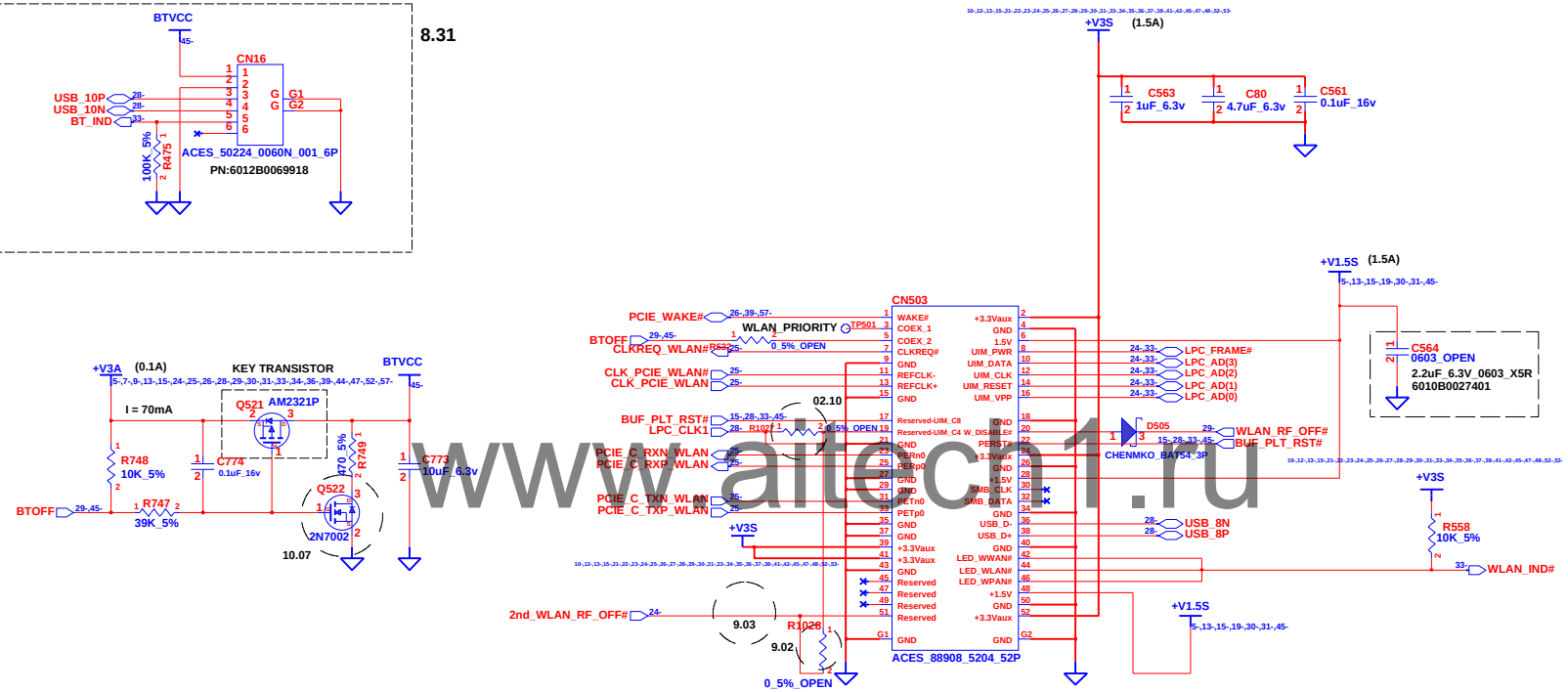

P/N:6026B0184301

www.aitech.ru

INVENTEC			
TITLE ZIDANE2.0 WLAN, BT & WebCAM			
SIZE A3	CODE CS	DOC. NUMBER 1310A24024-0-MTR	REV B
CHANGE by Drawer_Name	9-Feb-2011	SHEET 45 OF 58	

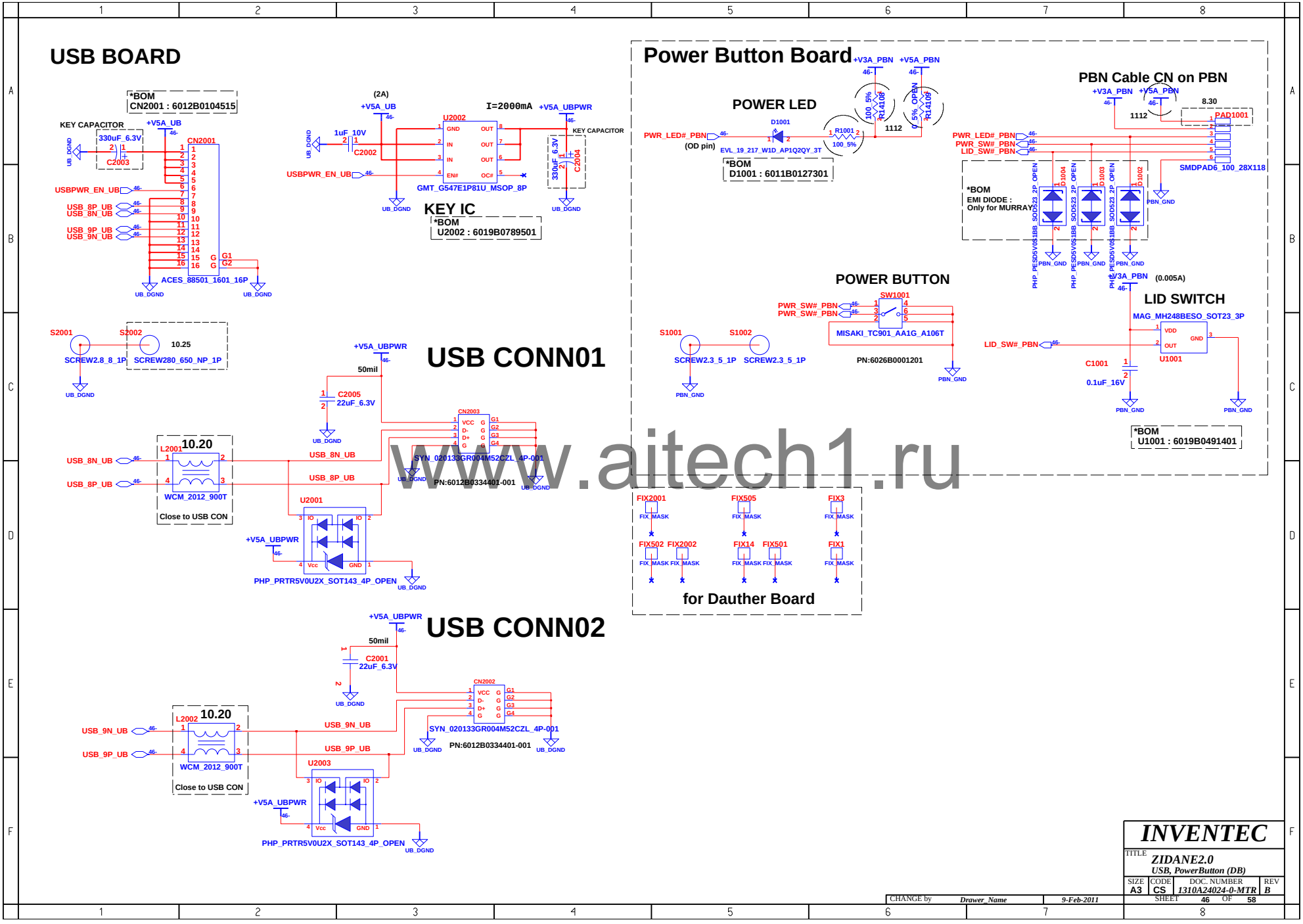

www.aitech1.ru

OPTION PART

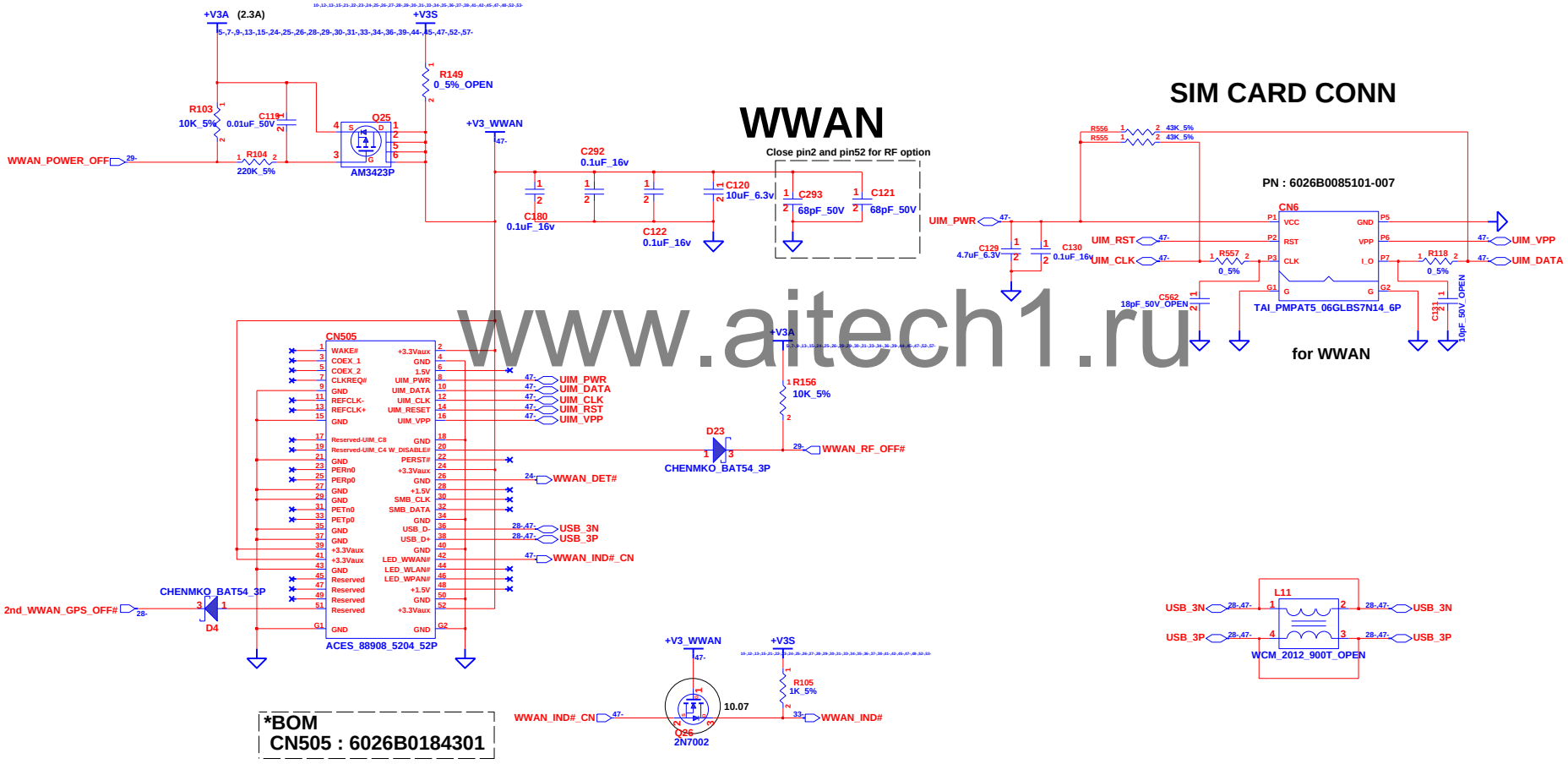

*BOM
CN505 : 6026B0184301

www.aitech1.ru

INVENTEC			
TITLE ZIDANE2.0 WWAN(Option)			
SIZE A3	CODE CS	DOC. NUMBER 1310A24024-0-MTR	REV B
CHANGE by Drawer_Name	9-Feb-2011	SHEET 47 OF 58	

OPTION PART

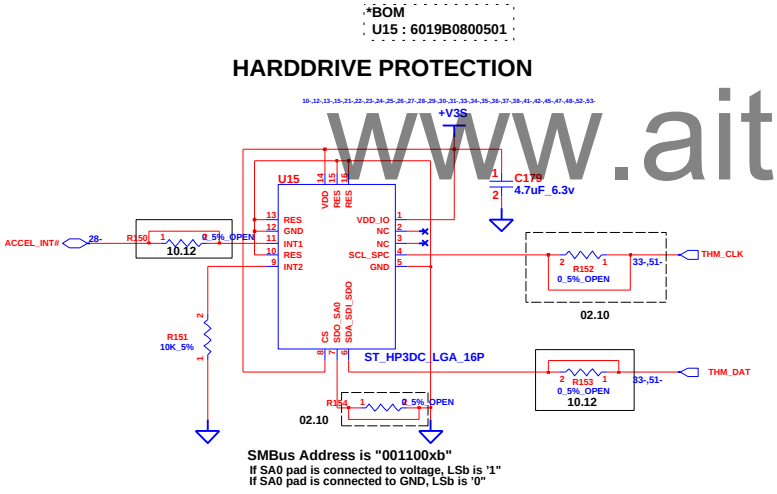

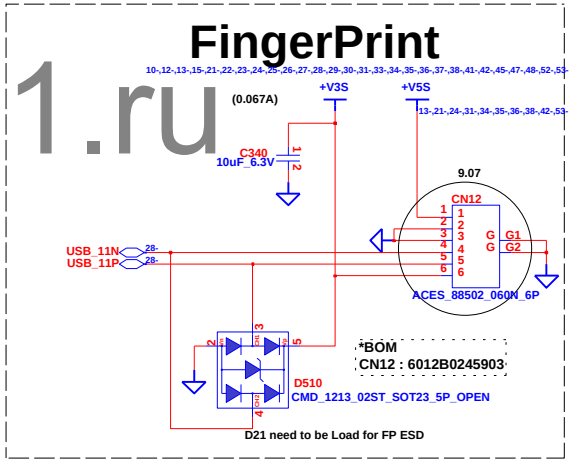

www.aitech1.ru

INVENTEC			
TITLE	ZIDANE2.0 Touchscreen, FP & HD LOCK(Option)		
SIZE A3	CODE CS	DOC. NUMBER 1310A24024-0-MTR	REV B
CHANGE by Drawer_Name	9-Feb-2011	SHEET 48 OF 58	

PN:6019B0810301

DIS ONLY UMA N/A

U503-1

PCI EXPRESS INTERFACE

PCIE_RX0P AE30 / PCIE_RX0N AE31
PCIE_RX1P AE29 / PCIE_RX1N AD28
PCIE_RX2P AD30 / PCIE_RX2N AC31
PCIE_RX3P AC29 / PCIE_RX3N AB28
PCIE_RX4P AB30 / PCIE_RX4N AA31
PCIE_RX5P AA29 / PCIE_RX5N Y28
PCIE_RX6P Y30 / PCIE_RX6N W31
PCIE_RX7P W29 / PCIE_RX7N V28
PCIE_RX8P V30 / PCIE_RX8N U31 — PEG_C_TX7P 17- / PEG_C_TX7N 17-
PCIE_RX9P U29 / PCIE_RX9N T28 — PEG_C_TX6P 17- / PEG_C_TX6N 17-
PCIE_RX10P T30 / PCIE_RX10N R31 — PEG_C_TX5P 17- / PEG_C_TX5N 17-
PCIE_RX11P R29 / PCIE_RX11N P28 — PEG_C_TX4P 17- / PEG_C_TX4N 17-
PCIE_RX12P P30 / PCIE_RX12N N31 — PEG_C_TX3P 17- / PEG_C_TX3N 17-
PCIE_RX13P N29 / PCIE_RX13N M28 — PEG_C_TX2P 17- / PEG_C_TX2N 17-
PCIE_RX14P M30 / PCIE_RX14N L31 — PEG_C_TX1P 17- / PEG_C_TX1N 17-
PCIE_RX15P L29 / PCIE_RX15N K30 — PEG_C_TX0P 17- / PEG_C_TX0N 17-

PCIE_TX0P AH30 / PCIE_TX0N AG31
PCIE_TX1P AG29 / PCIE_TX1N AF28
PCIE_TX2P AF27 / PCIE_TX2N AE26
PCIE_TX3P AD27 / PCIE_TX3N AD26
PCIE_TX4P AC25 / PCIE_TX4N AB25
PCIE_TX5P Y23 / PCIE_TX5N Y24
PCIE_TX6P AB27 / PCIE_TX6N AB26
PCIE_TX7P Y27 / PCIE_TX7N Y26
PCIE_TX8P W24 / PCIE_TX8N W23 — PEG_RX7P 49- / PEG_RX7N 49-
PCIE_TX9P V27 / PCIE_TX9N U26 — PEG_RX6P 49- / PEG_RX6N 49-
PCIE_TX10P U24 / PCIE_TX10N U23 — PEG_RX5P 49- / PEG_RX5N 49-
PCIE_TX11P T26 / PCIE_TX11N T27 — PEG_RX4P 49- / PEG_RX4N 49-
PCIE_TX12P T24 / PCIE_TX12N T23 — PEG_RX3P 49- / PEG_RX3N 49-
PCIE_TX13P P27 / PCIE_TX13N P26 — PEG_RX2P 49- / PEG_RX2N 49-
PCIE_TX14P P24 / PCIE_TX14N P23 — PEG_RX1P 49- / PEG_RX1N 49-
PCIE_TX15P M27 / PCIE_TX15N N26 — PEG_RX0P 49- / PEG_RX0N 49-

CLOCK
CLK_PEG 25- / CLK_PEG# 25- — AK30 PCIE_REFCLKP / AK32 PCIE_REFCLKN

CALIBRATION
PCIE_CALRP Y22 — R180 1.27K_1% — VPCIE = 1.0 V — +VPCIE 12-,50-,52-,53-
PCIE_CALRN AA22 — R184 2K_1%

For Park-S3 Pin_N10 must need to pull down to GND

R225 10K_5% — N10 PWRGOOD

PEG_SLT_RST# 49- — AL27 PERSTB

AMD_SEYMOUR_XT_S3_FCBGA_631P

Close to GPU

PEG_RX0N 49-	C156	0.1uF_16V	17-	PEG_C_RX0N
PEG_RX1N 49-	C152	0.1uF_16V	17-	PEG_C_RX1N
PEG_RX2N 49-	C159	0.1uF_16V	17-	PEG_C_RX2N
PEG_RX3N 49-	C154	0.1uF_16V	17-	PEG_C_RX3N
PEG_RX4N 49-	C161	0.1uF_16V	17-	PEG_C_RX4N
PEG_RX5N 49-	C103	0.1uF_16V	17-	PEG_C_RX5N
PEG_RX6N 49-	C108	0.1uF_16V	17-	PEG_C_RX6N
PEG_RX7N 49-	C110	0.1uF_16V	17-	PEG_C_RX7N

PEG_RX0P 49-	C155	0.1uF_16V	17-	PEG_C_RX0P
PEG_RX1P 49-	C151	0.1uF_16V	17-	PEG_C_RX1P
PEG_RX2P 49-	C158	0.1uF_16V	17-	PEG_C_RX2P
PEG_RX3P 49-	C153	0.1uF_16V	17-	PEG_C_RX3P
PEG_RX4P 49-	C160	0.1uF_16V	17-	PEG_C_RX4P
PEG_RX5P 49-	C104	0.1uF_16V	17-	PEG_C_RX5P
PEG_RX6P 49-	C157	0.1uF_16V	17-	PEG_C_RX6P
PEG_RX7P 49-	C109	0.1uF_16V	17-	PEG_C_RX7P

www.aitech1.ru

10.18 R1071 0_5%_OPEN

C150 0.1uF_16v — +V3S_RUN 50-,51-,52- — 8.31

DGPU_HOLD_RST# 28- — R137 100K_5% — U13 TC7SZ08FU — 49- PEG_SLT_RST#

PLT_RST# 28-,39-,41-,57- — R136 0_5%_OPEN

SWITCHABLE GRAPHICS

INVENTEC			
TITLE ZIDANE2.0			
SIZE A3	CODE CS	DOC. NUMBER 1310A24024-0-MTR	REV B
CHANGE by Drawer_Name	9-Feb-2011	SHEET 49 OF 58	

MEM_ID3 R172	MEM_ID2 R569	MEM_ID1 R568	MEM_ID0 R567	vendor
0	0	0	1	Samsung(512MB) (Default)
0	0	1	1	hynix (512MB) D-die
0	0	1	0	hynix (1G)
0	1	1	0	Samsung(1G) C-die

DIS ONLY UMA N/A

STRAPS	PIN	Description of default settings
TX_PWRS_ENB	GPIO0	PCIE full TX output swing.
TX_DEEMPH_EN	GPIO1	PCIE transmitter de-emphasis enabled.
BIF_GEN2_EN_A	GPIO2	PCIE GEN2 enabled
BIF_DEBUG_ACCESS	GPIO4	Debug signals muxed out.
	GPIO7_BLON	Control Backlight On / Off
BIF_VGA_DIS	GPIO9	VGA ENABLED
ROMIDCFG(2:0)	GPIO[13:11]	Memory aperture size select.

If GPIO_22_EN = 0 , then GPIO[13:11] defines the primary memory aperture size.

GPIO_13	GPIO_12	GPIO_11	Memory aperture size
0	0	1	512MB / 256MB (Default)
1	1	0	reserved

POW_SW1	POW_SW0	+VDDC_GPU
0	0	1.1V
0	1	1V
1	0	0.95V
1	1	0.9V

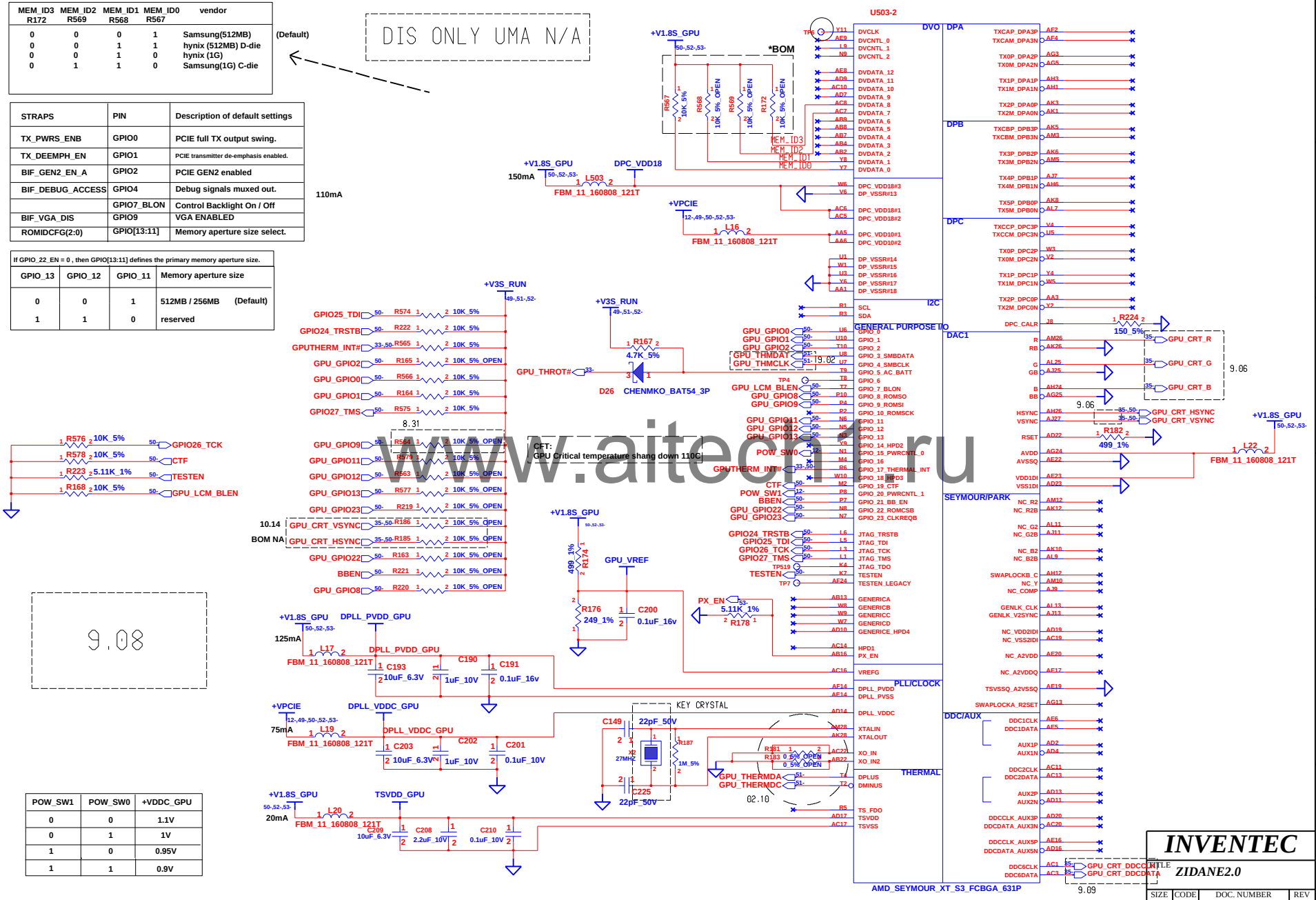

www.aitech.ru

SIZE	CODE	DOC. NUMBER	REV
A3	CS	1310A24024-0-MTR	B

INVENTEC

TITLE ZIDANE2.0

CHANGE by Drawer_Name 9-Feb-2011

SHEET 50 OF 58

DIS ONLY UMA N/A

KEY IC

*BOM
U16
PN/6019B0437702

BOM 10.15
UMA R1025,R1026,R161,R162,Q42,Q44 NC
DIS R1025,R1026,R161,R162,Q42,Q44 STUFF

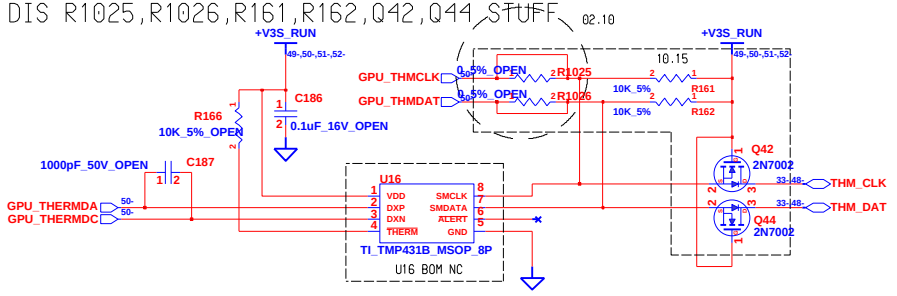

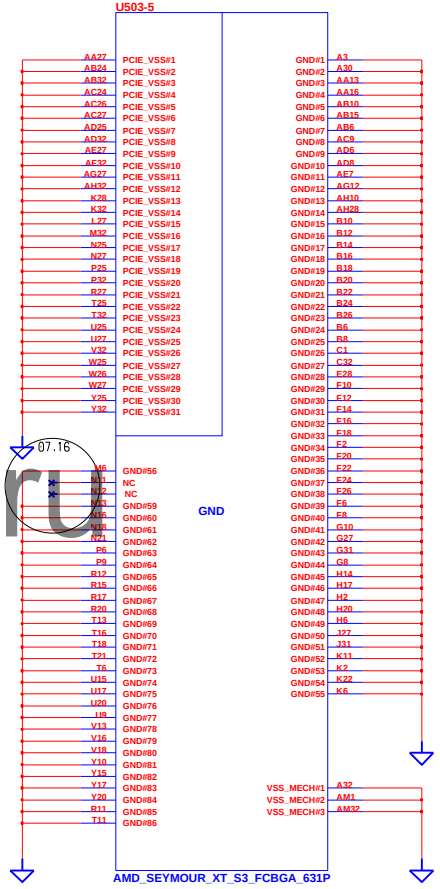

only GPU Temp.

SMB Address is 100 1101

2nd : 6019B0671902 TMP431B
Main : 6019B0437702 EMC1402-2

www.aitech1.ru

CHANGE by	Drawer_Name	9-Feb-2011

INVENTEC

TITLE *ZIDANE2.0*

SIZE	CODE	DOC. NUMBER	REV
A3	CS	1310A24024-0-MTR	B

SHEET 51 OF 58

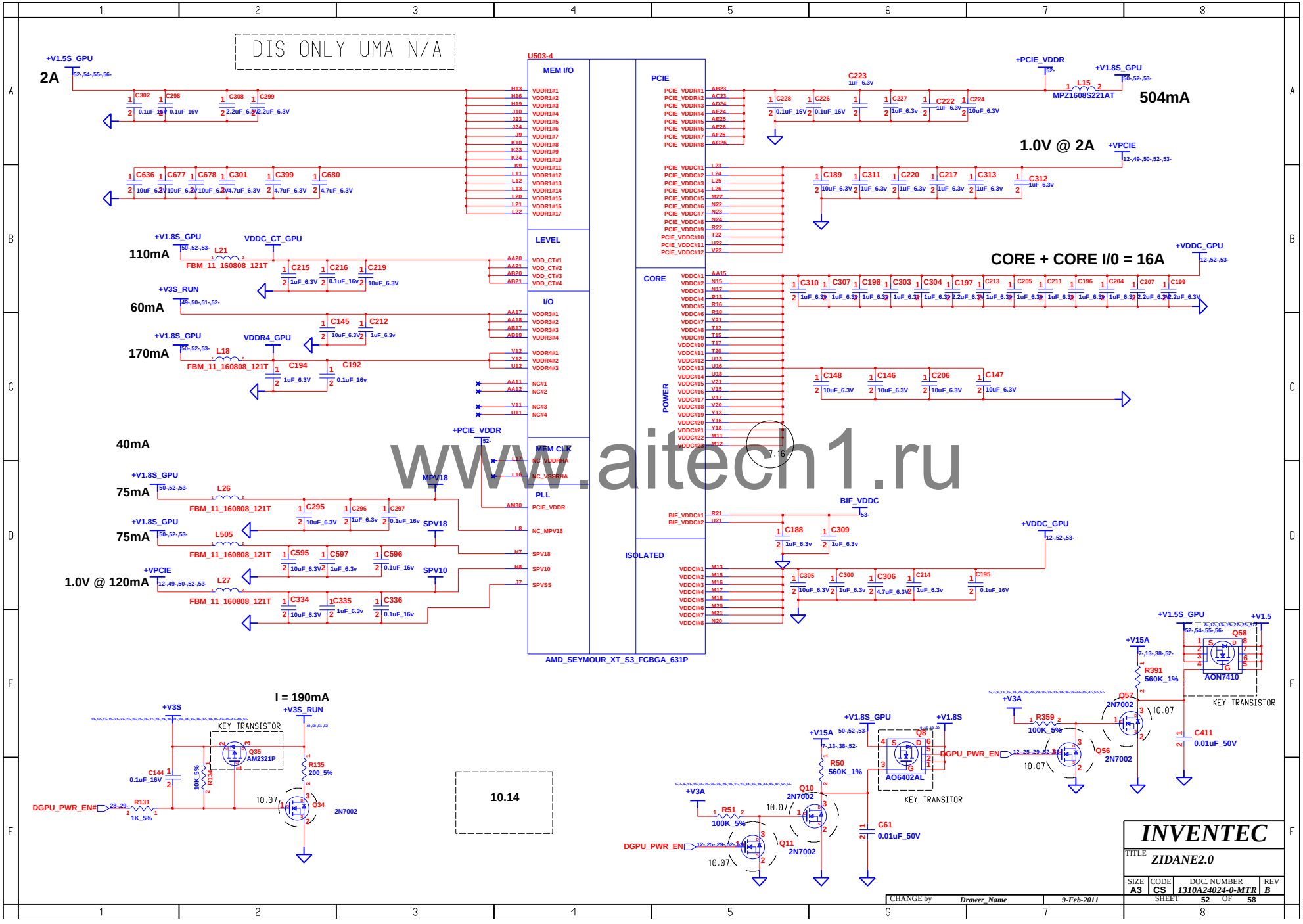

www.aitech1.ru

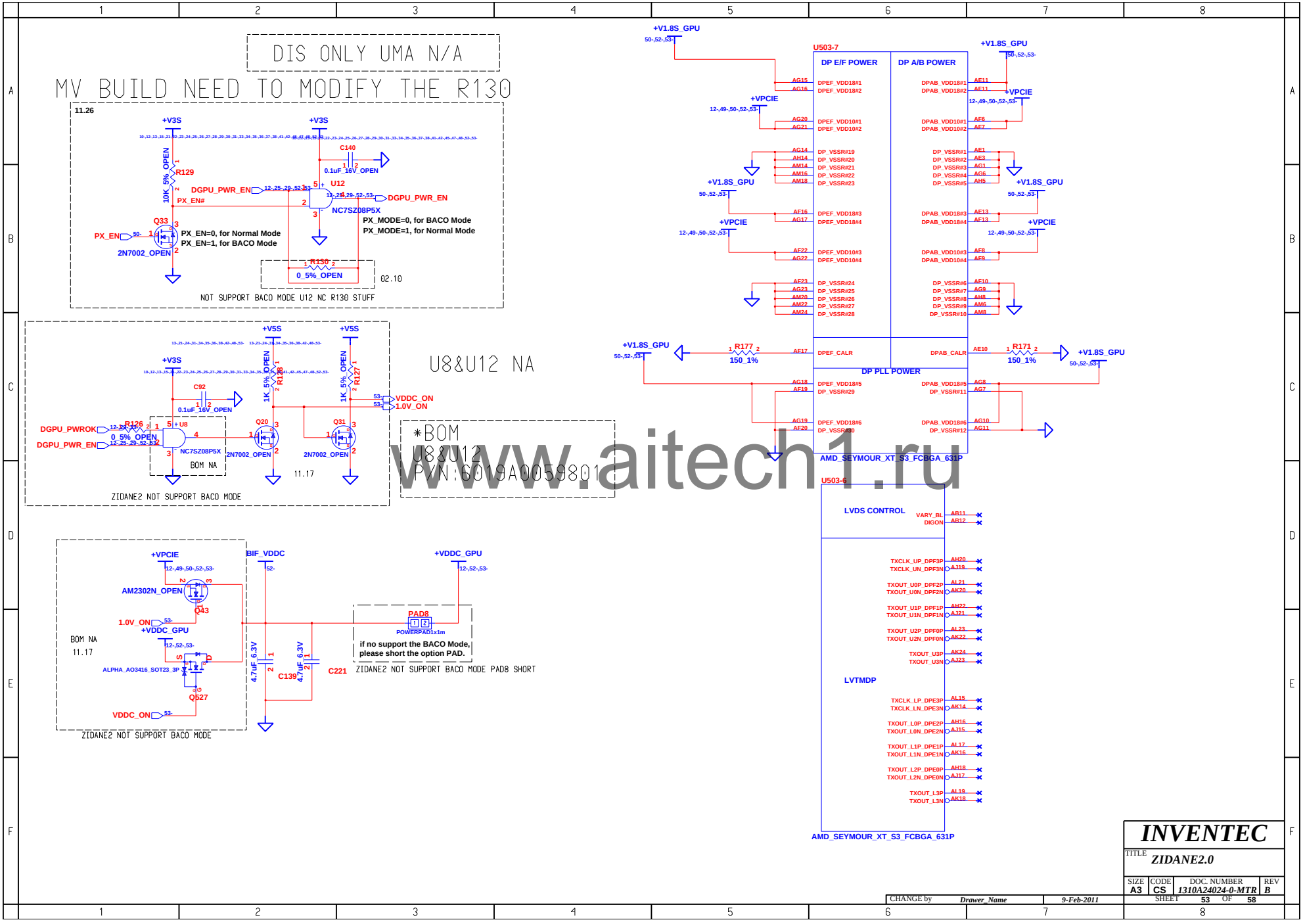

www.aitech1.ru

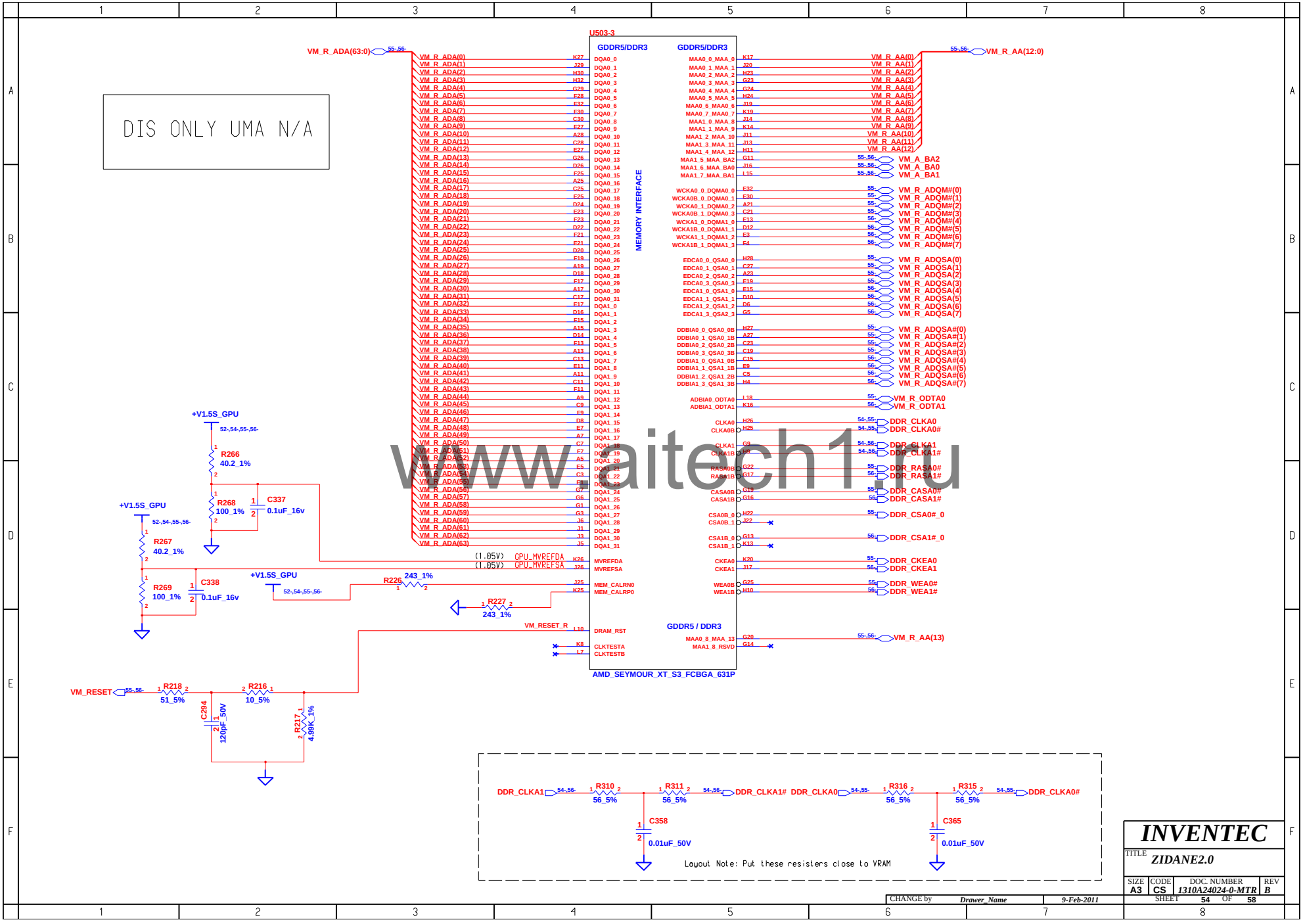

www.aitech1.ru

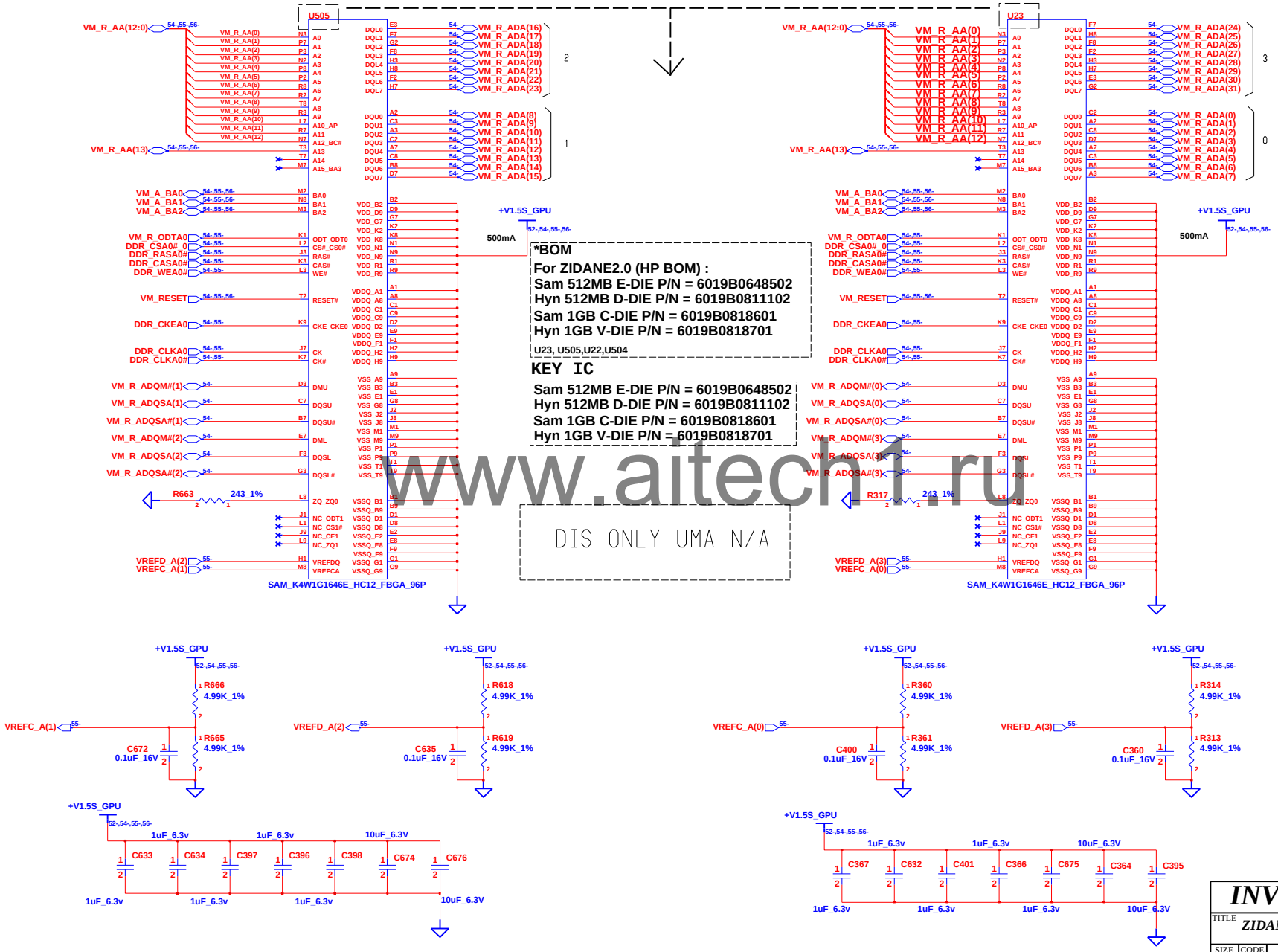

www.aitech.ru

CHANGE by	Drawer_Name	9-Feb-2011	

INVENTEC

TITLE: ZIDANE2.0

SIZE	CODE	DOC. NUMBER	REV
A3	CS	1310A24024-0-MTR	B

SHEET 55 OF 58

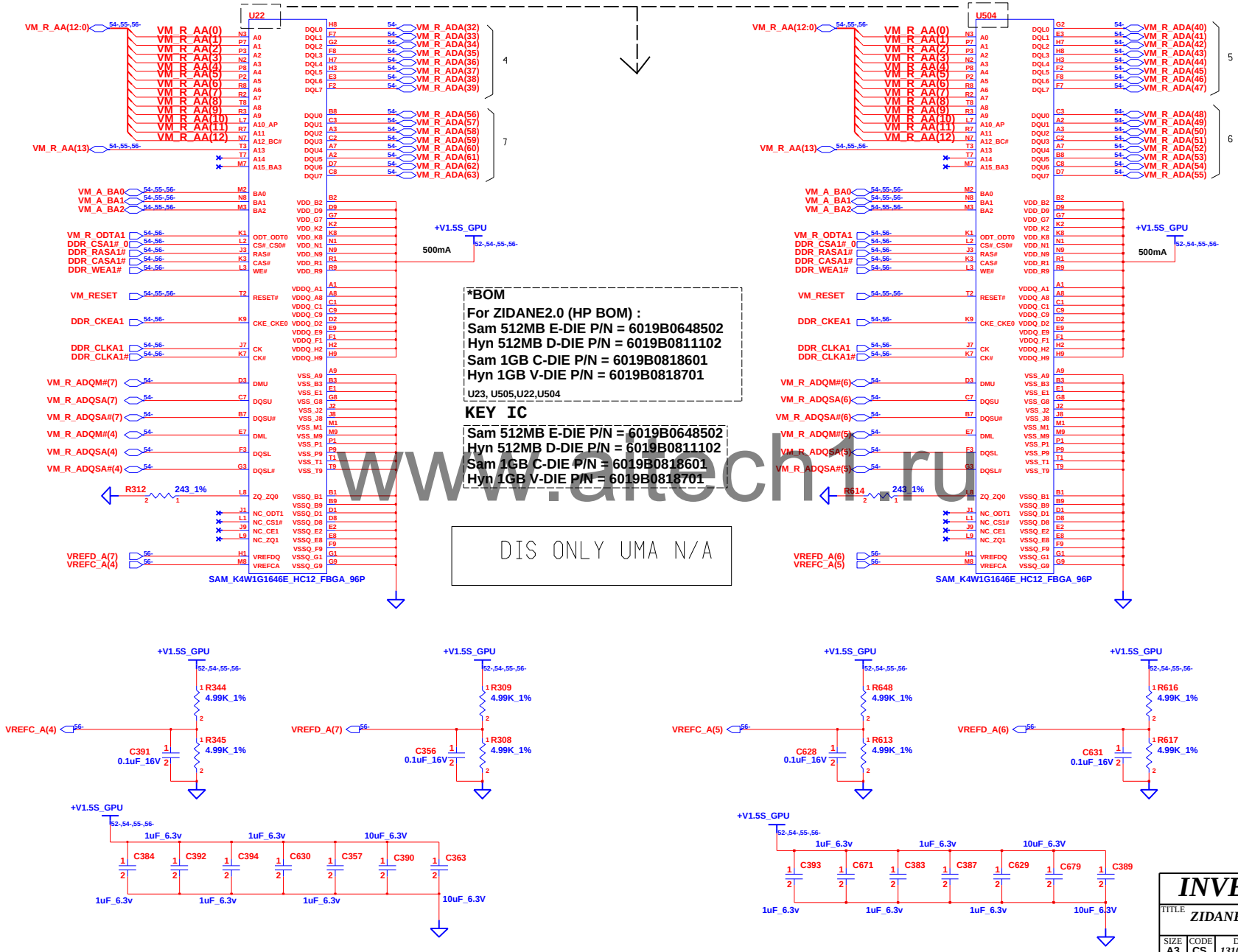

*BOM
For ZIDANE2.0 (HP BOM) :
Sam 512MB E-DIE P/N = 6019B0648502
Hyn 512MB D-DIE P/N = 6019B0811102
Sam 1GB C-DIE P/N = 6019B0818601
Hyn 1GB V-DIE P/N = 6019B0818701
U23, U505,U22,U504

KEY IC
Sam 512MB E-DIE P/N = 6019B0648502
Hyn 512MB D-DIE P/N = 6019B0811102
Sam 1GB C-DIE P/N = 6019B0818601
Hyn 1GB V-DIE P/N = 6019B0818701

DIS ONLY UMA N/A

www.altech.ru

INVENTEC

TITLE ZIDANE2.0

SIZE	CODE	DOC. NUMBER	REV
A3	CS	1310A24024-0-MTR	B

SHEET 56 OF 58

CHANGE by Drawer_Name 9-Feb-2011

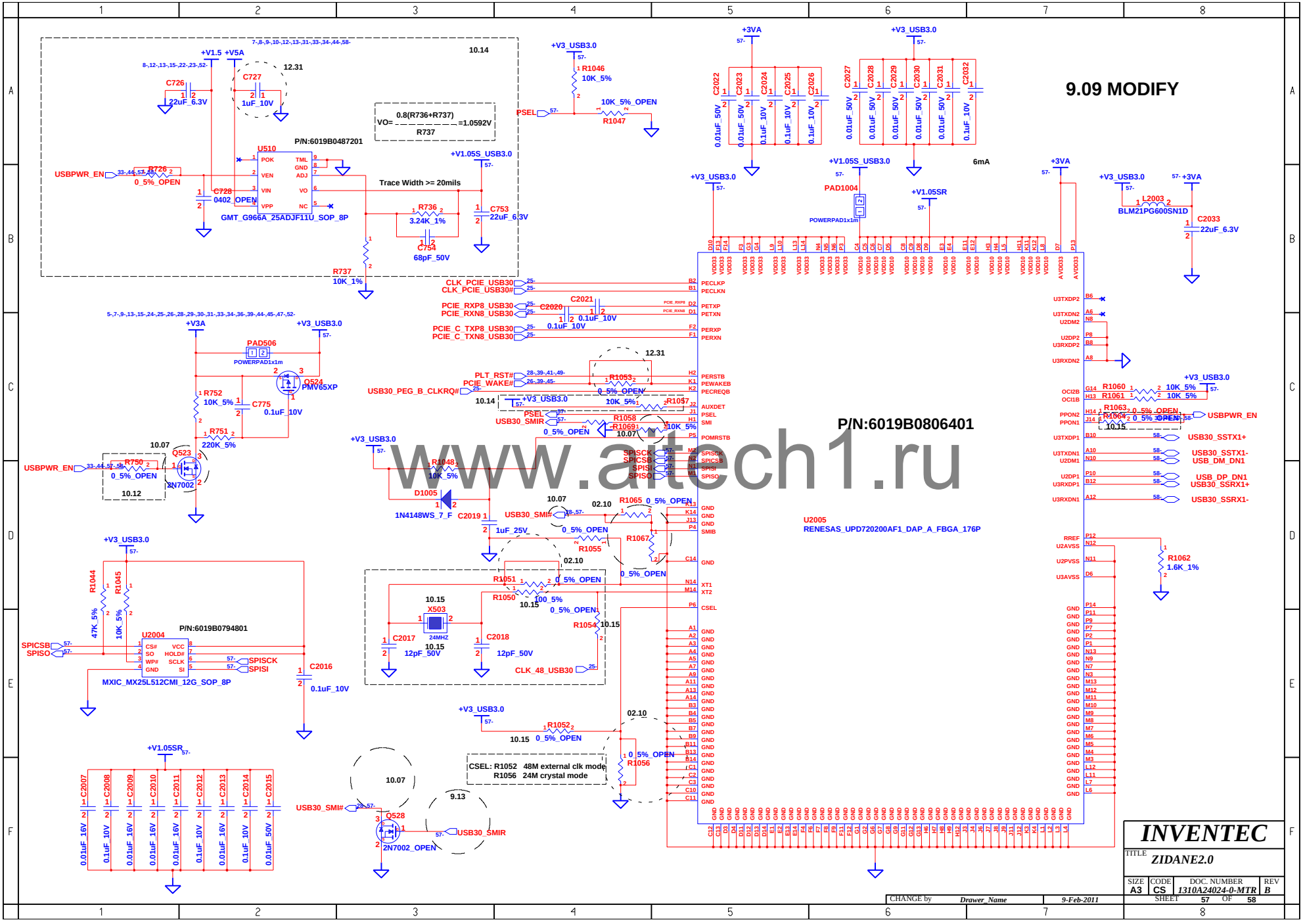

www.altech1.ru

USB 3.0 & eSATA

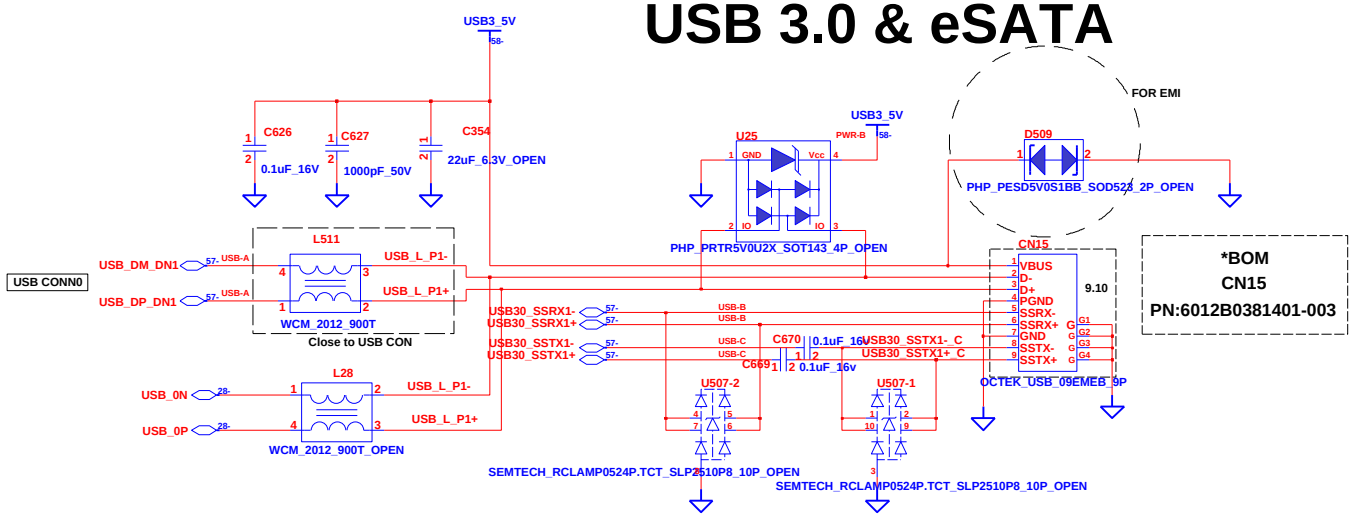

www.aitech1.ru

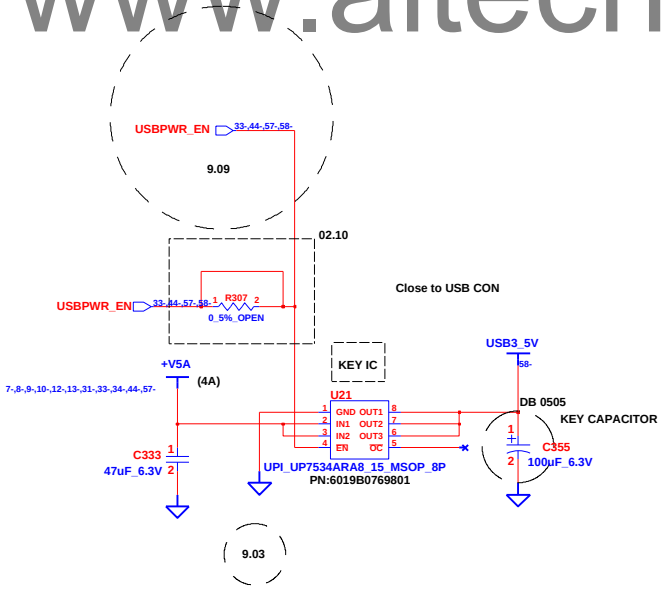

INVENTEC			
TITLE ZIDANE2.0			
SIZE A3	CODE CS	DOC. NUMBER 1310A24024-0-MTR	REV B
		SHEET 58 OF 58	

CHANGE by Drawer_Name 9-Feb-2011